Radio control model / Flugmodel

SIAI MARCHETTI

SF-260

VQ No: VQA143GE - VQA143US - VQA143IT

EP GP

ALL BALSA, PLYWOOD CONSTRUCTION AND ALMOST READY TO FLY

Instruction manual / Montageanleitung

SPECIFICATIONS

Wingspan:.....1630mm (64.1in)
Length:.....1300mm (51.1in)
Electric Motor:.....See next pager
Glow Engine:..... .55 - .61 2T
RTF Weight: 3.9Kg / 8.6lbs (Will vary with Equipment Used).
Radio:.....8 Channel / 6-7 Servos
Function: Ailerons-Elevator-Rudder-Throttle Flaps-Optional Retractable Landing Gear.

TECHNISCHE DATEN

Spannweite:.....1630mm
Länge:.....1300mm
Elektroantrieb.....(siehe nächste Seite)
Verbrennerantrieb:.....10cc
Fluggewicht:.....3.9Kg
Fernsteuerung.....8 Kanal / 6-7 Servos

RADIO CONTROL MODEL ®

WARNING! This radio controlled model is NOT a toy. If modified or flown carelessly it could go out of controll and cause serious human injury or property damage. Before flying your airplane, ensure the air field is spacious enough. Always fly it outdoors in safe areas and seek professional advice if you are unexperienced.

ACHTUNG! Dieses ferngesteuerte Modell ist KEIN Spielzeug! Es ist für fortgeschrittene Modellflugpiloten bestimmt, die ausreichende Erfahrung im Umgang mit derartigen Modellen besitzen. Bei unsachgemässer Verwendung kann hoher Personen- und/oder Sachschaden entstehen. Fragen Sie in einem Modellbauverein in Ihrer Nähe um professionelle Unterstätzung, wenn Sie Hilfe im Bau und Betrieb benötigen. Der Zusammenbau dieses Modells ist durch die vielen Abbildungen selbsterklärend und ist für fortgeschrittene, erfahrene Modellbauer bestimmt.

REQUIRED ITEMS / Zum Betrieb wird benotigt

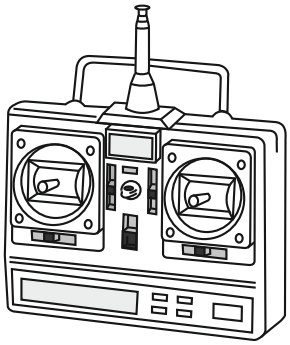

12x6 for .58 - 2 cycle engine
12x7 for .61 - 2 cycle engine
14x8 for Electric motor

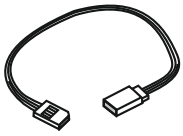

Extension cord for aileron servos: 50cm(x2)
Extension cord for flap servos: 50cm(x4)
Extension cord for retract servos: 30cm(x2)
Extension cord for Rx battery pack: 20cm(x1)

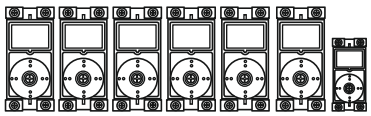

Minimum 8 channel radio
for airplane with 7 servos
.Motor control x1 .Aileron x 2
.Flap x 2 .Elevator x1 .Rudder x1

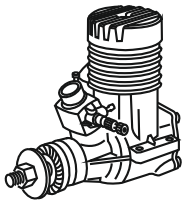

.55 ~ .61 - 2 cycle

Silicone tube

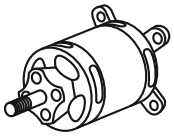

Motor Brushless
1000 Watt

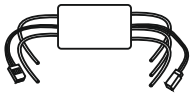

ESC 80A

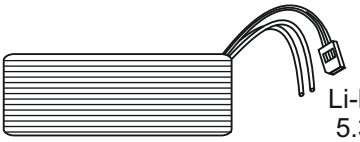

Li-Po Battery
5.300 - 22.2v

GLUE / *KLEBSTOFF*

Silicon sealer

Cyanoacrylate
Glue

Epoxy Glue (5 minute type)
Epoxy Glue (30 minute type)

Hobby knife

Needle nose Pliers

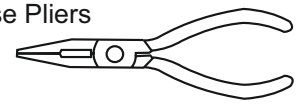

Sander

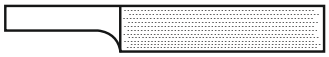

Phillip screw driver

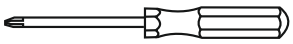

Scissors

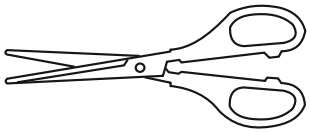

Hex Wrench

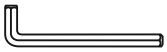

Awl

Wire Cutters

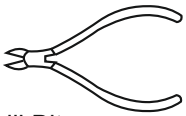

Masking tape - Straight Edged Ruler - Pen or pencil - Rubbing alcohol - Drill and Assorted Drill Bits

If exposed to direct sunlight and / or heat, wrinkles can appear. Storing the model in a coll place will let the wrinkles disappear. Otherwise, remove wrinkles in covering film with a hair-dryer, starting with low temperature. You can fix the corners by using a hot iron.

Bei Sonneneinstrahlung und / oder Wärme kann die Folie erschlaffen bzw. Falten entstehen. Verwenden Sie ein Warumluftgebläse (Haartrockner) um evtl. Falten aus der Folie zu bekommen. Die Kanten können Sie mit einem Bügeleisen behandeln. Nicht zuviel Hitze anwenden

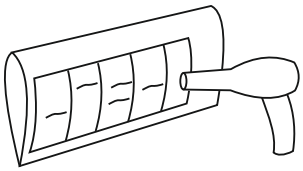

1.5mm Drill holes using the stated size of drill (in this case 1.5 mm Ø)

! Take particular care here

Hatched-in areas: remove covering film carefully

Check during assembly that these parts move freely, without binding

A B Use epoxy glue

CA Apply cyano glue

L/R Assemble left and right sides the same way.

X Not included. These parts must be purchased separately

1.5mm Löcher bohren mit dem angegebenen Bohrer (hier 1,5 mm)

! Hier besonders aufpassen

Schraffierte Stellen, Bespannfolie vorsichtig entfernen

Während des Zusammenbaus immer prüfen, ob sich die Teile auch reibungslos bewegen lassen

A B Epoxy-Klebstoff verwenden

CA Sekundenkleber auftragen

L/R Linke und rechte Seite wird gleichermaßen zusammengebaut

X Nicht enthalten. Teile müssen separat gekauft werden.

Read through the manual before you begin, so you will have an overall idea of what to do.

CONVERSION TABLE

1.0mm = 3/64”	3.0mm = 1/8”	10mm = 13/32”	25mm = 1”
1.5mm = 1/16”	4.0mm = 5/32”	12mm = 15/32”	30mm = 1-3/16”
2.0mm = 5/64”	5.0mm = 13/64”	15mm = 19/32”	45mm = 1-51/64”
2.5mm = 3/32”	6.0mm = 15/64”	20mm = 51/64”	

1-Aileron extension cord installation

Siai Marchetti SF-260

Aileron servo hatch

30cm Extension cord X

WING BOTTOM-VIEW

Flap servo hatch

Thread

Thread

Turn the screws and full the aileron and flap servo hatch out of the wing half.

Using the thread (pre-installed at factory) to slide the aileron and flap extension cord into the wing half.

Using the adhesive tape to secure the one end of the aileron and flap extension cord in place.

WING TOP-VIEW

Adhesive tape

Using the adhesive tape to secure the one end of the aileron and flap extension cord in place.

L/R

2- Flap servo installation

1.5mm

X

cut away only the covering

Flap servo

45º

L/R

3- Flap servo installation

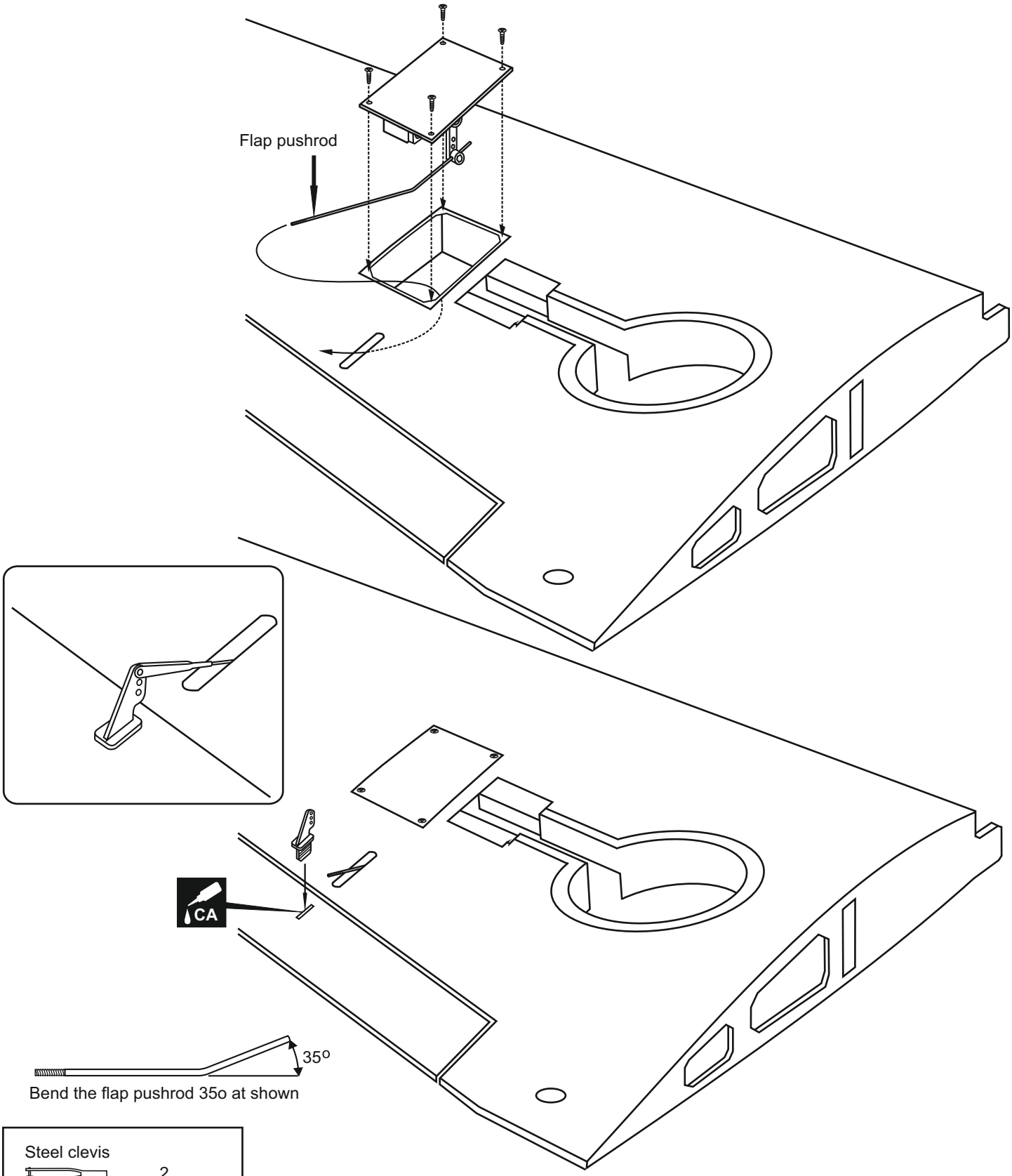

Bend the flap pushrod 35o at shown

Steel clevis 2

Flap push rod (2mm) 2

Plastic control horn .....2 set

Connector 2mm 2

L/R

Installing the flap servo on to the hatch (side-view)

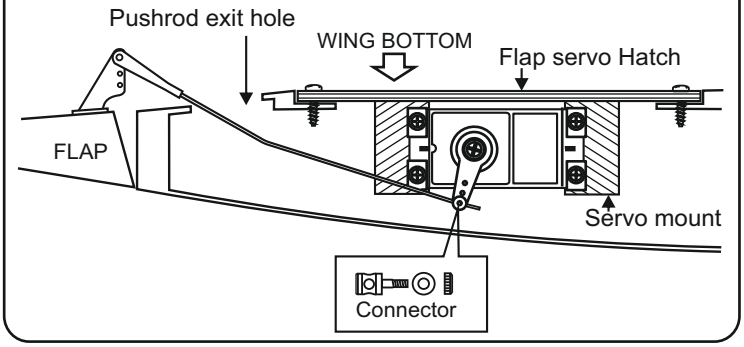

4- Aileron servo installation

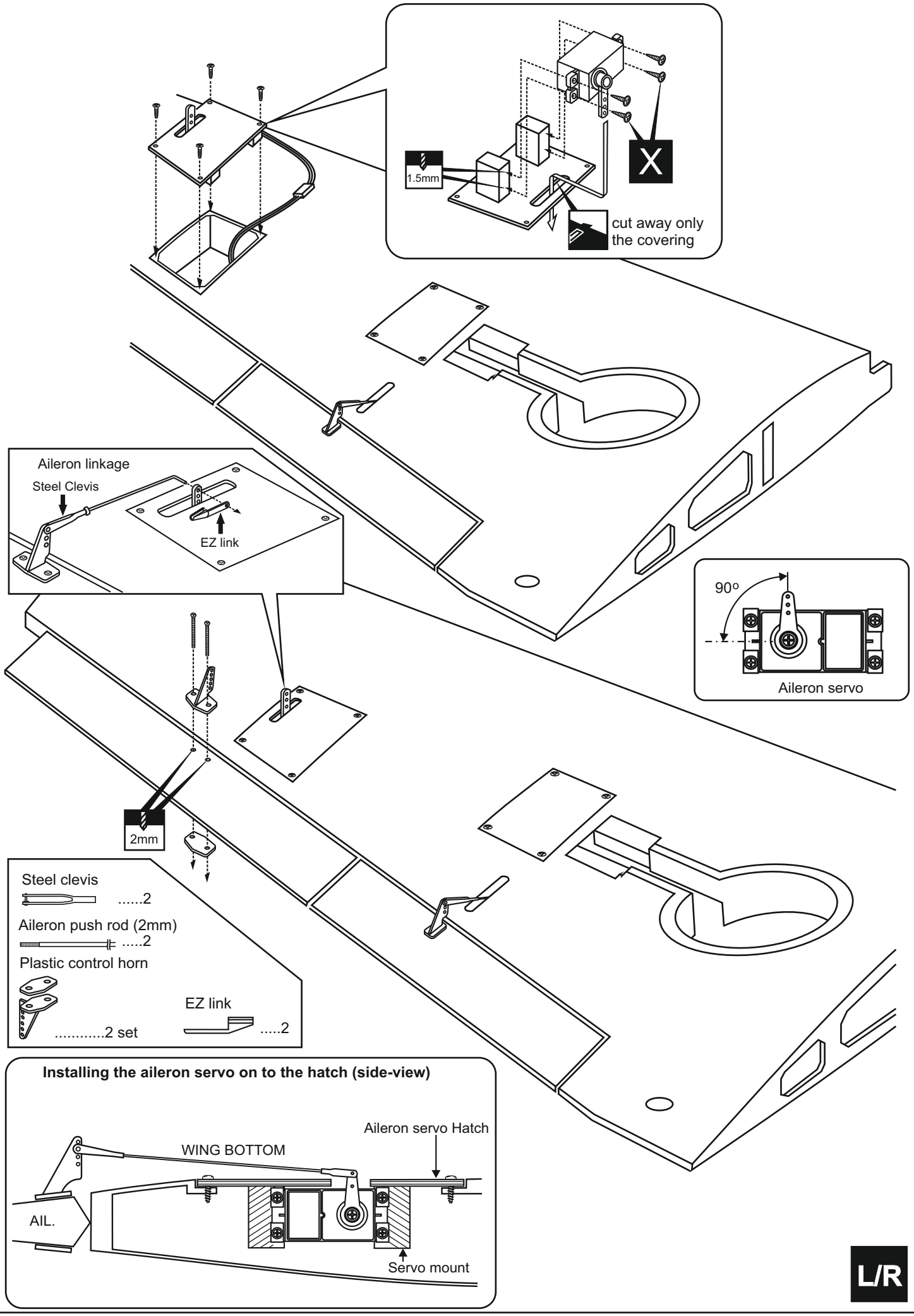

5- Electric retract and Strut installation

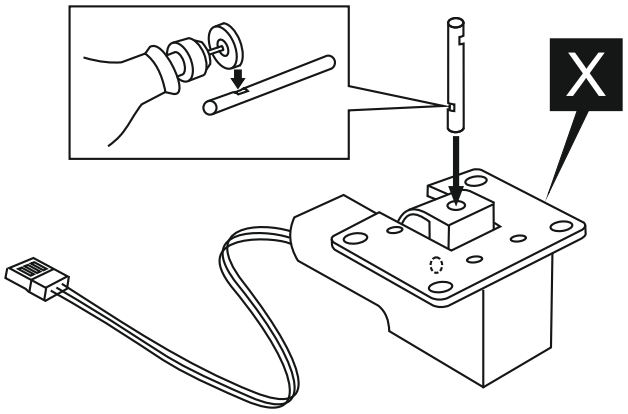

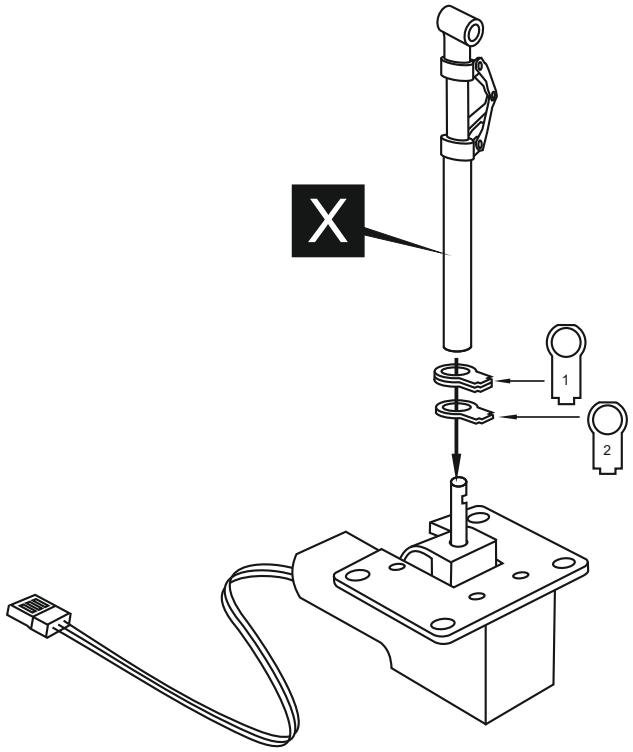

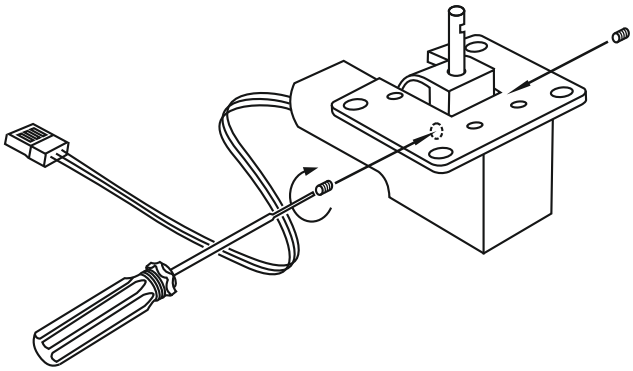

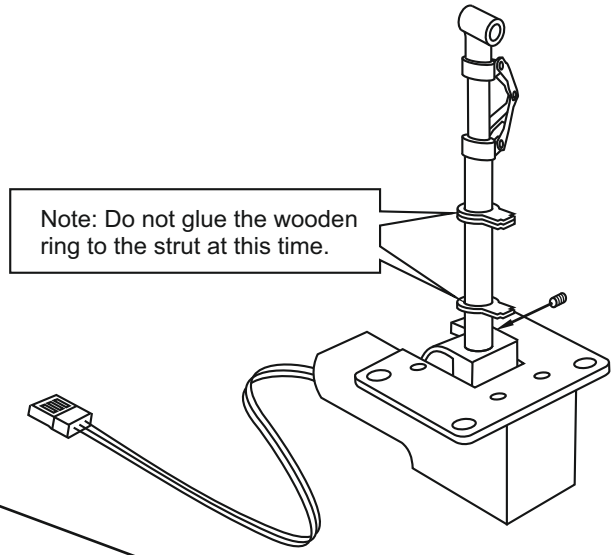

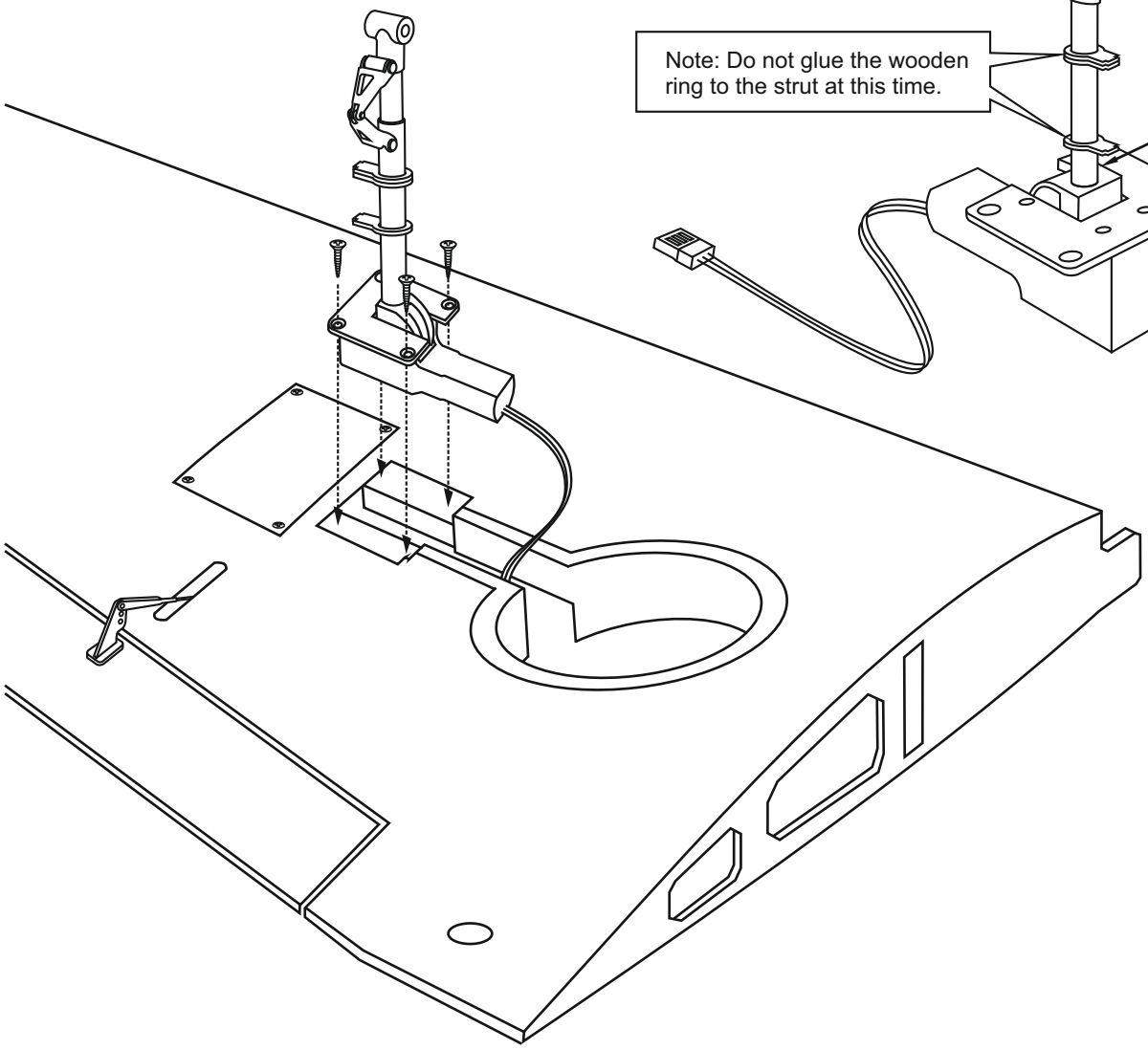

L/R

6- Electric retract and Strut installation

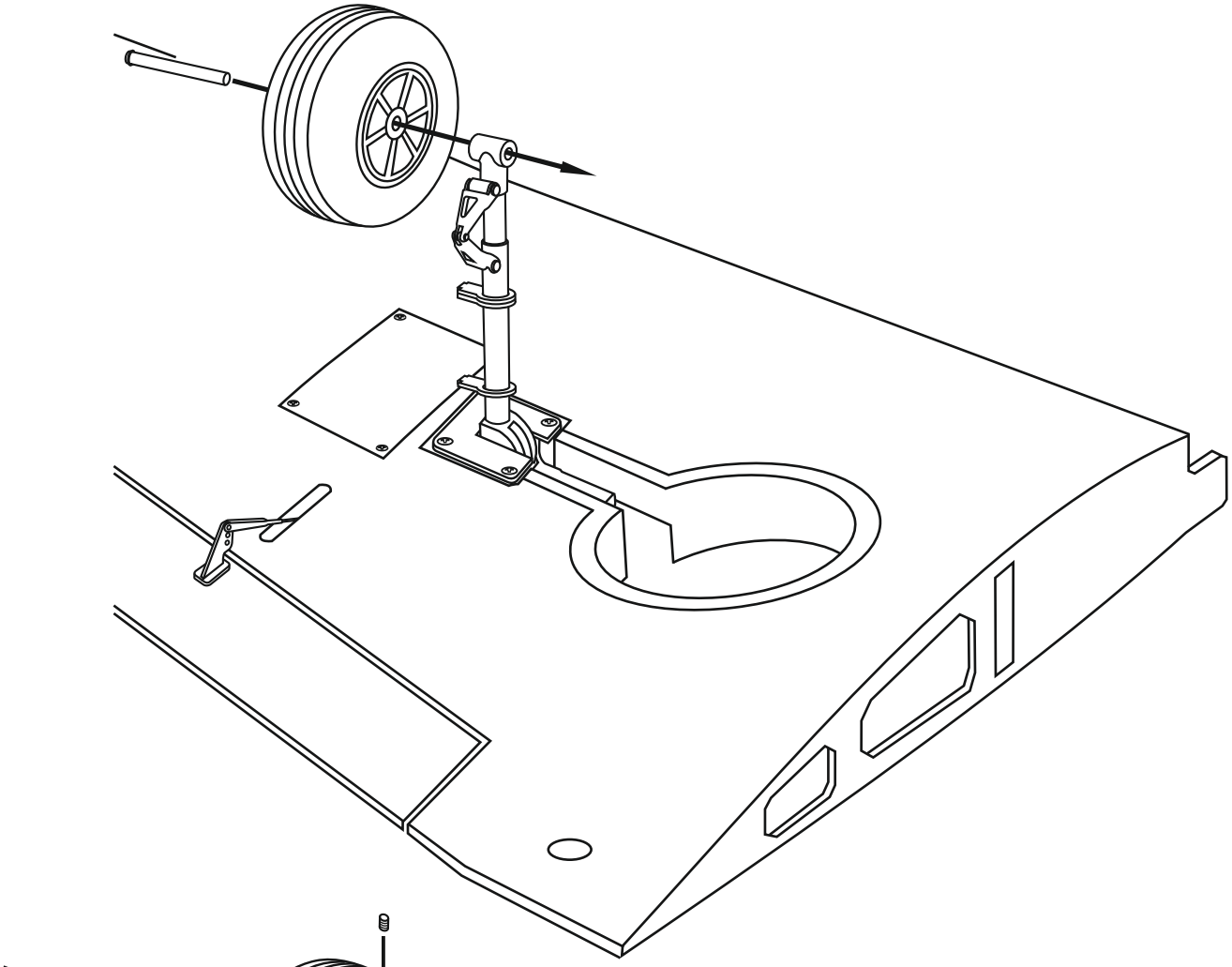

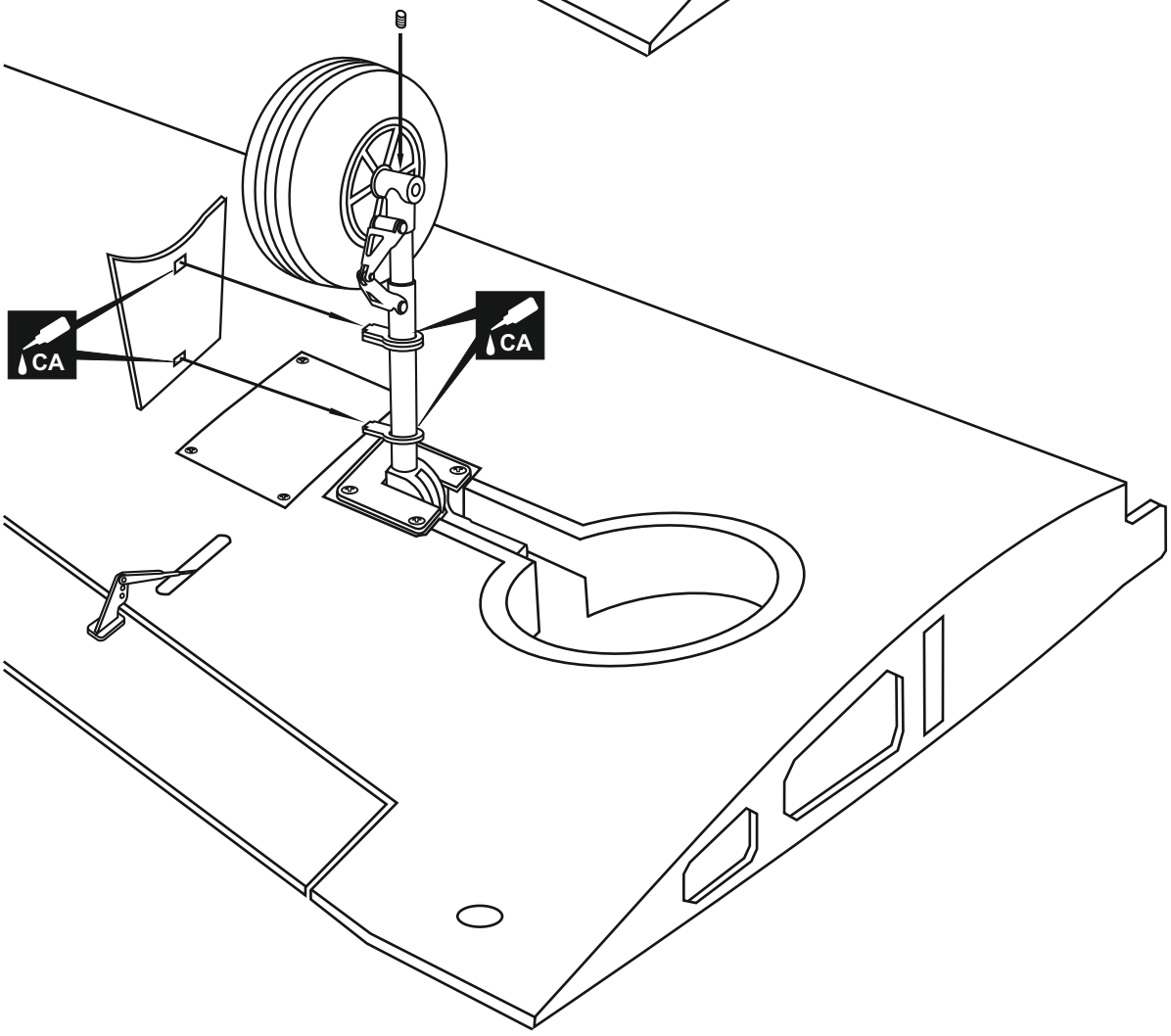

L/R

7- Fixed gear installation

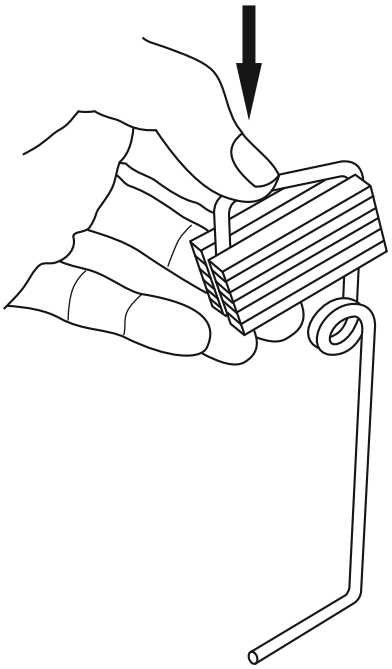

7A

Slide the landing gear onto the plywood gear mount and push the landing gear as shown.

TOP VIEW

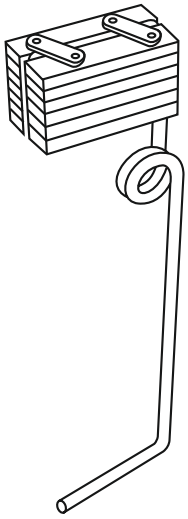

7B

Using the nylon gear strap as a template, mark the plywood gear mount where the four holes to be drill.

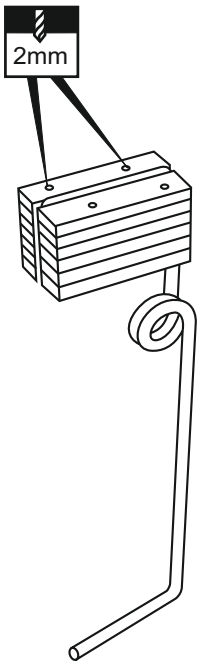

7C

Remove the nylon gear strap and drill a 2mm hole at each of the four marks marked.

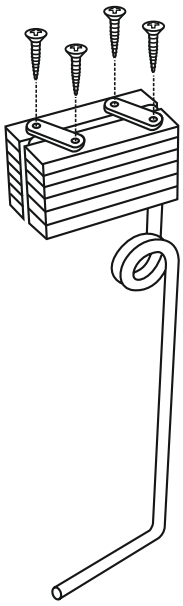

7D

Reposition the nylon gear strap and secure them in place using four 3x20mm screws.

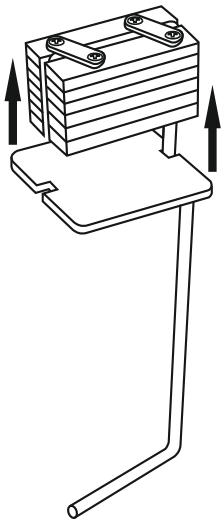

7E

Attach the ply gear mount plate to the plywood gear mount

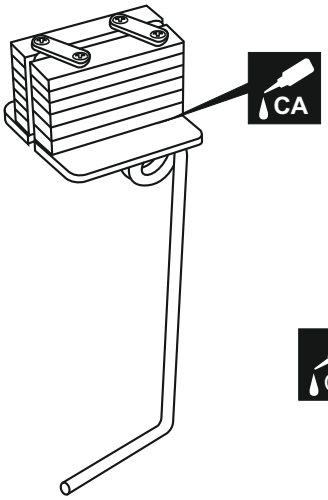

7F

Secure the ply gear mount plate in place using CA glue.

BOTTOM VIEW

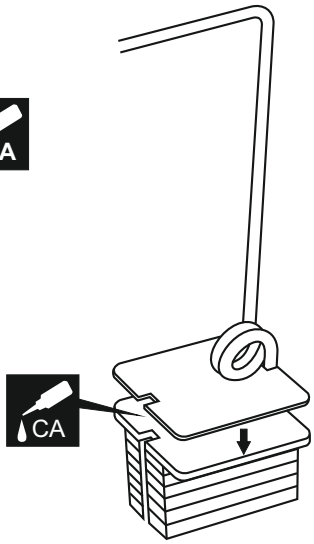

7G

Attach the square plastic onto the ply gear mount, secure it in place using CA glue.

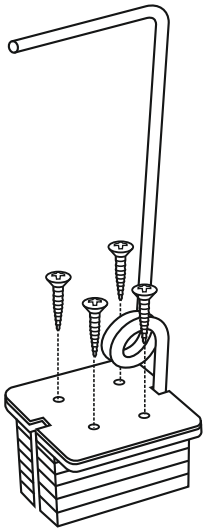

7H

Drill a 2mm holes through the square plastic and ply gear mount plate.
Secure the ply gear mount using four 3x20mm screws.

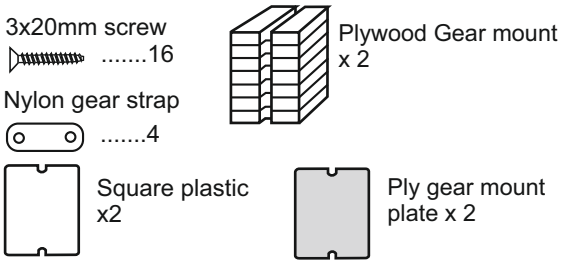

8- Fixed gear installation continued

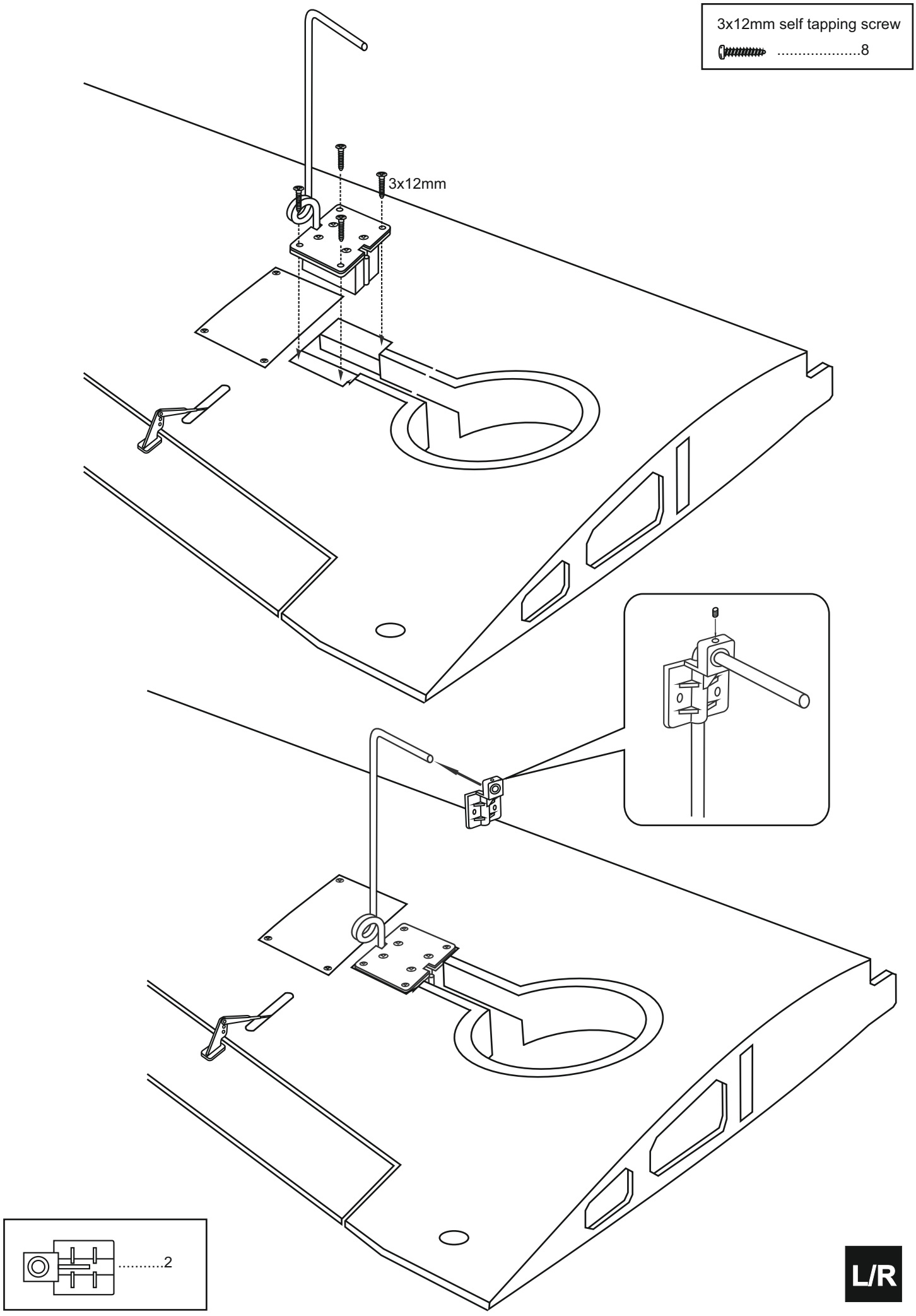

9- Fixed gear installation

2x6mm self tapping screw 4

1.5mm

2x6mm

1.5mm

L/R

10- Joining the wing halves

Draw the center line on the wing joiner

Before gluing:

- Draw the center line on the wing joiner.
- Trial fit each part before gluing . Be certain that there are no gaps. If the parts will join, but with a gaps, sand or trim the parts a little at a time until the parts meet exactly with no gaps.
- Check for the correct dihedral angle

A B

CA

A B

30 min. Epoxy

6x20mm dowel

Coat one half of the dihedral brace with epoxy up to the center line. Install the epoxy-coated side of the dihedral brace into the wing joiner cavity up to the center line.

11- Joining the wing halves

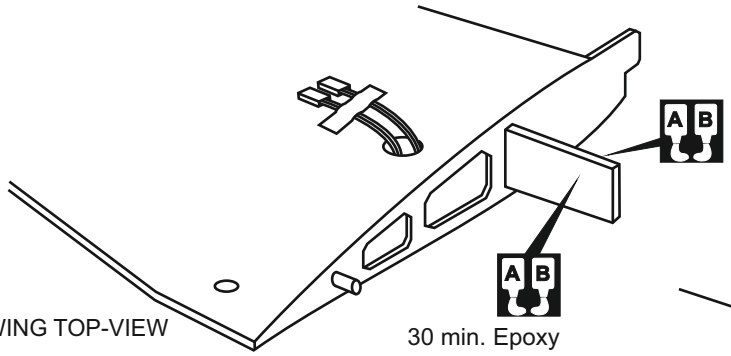

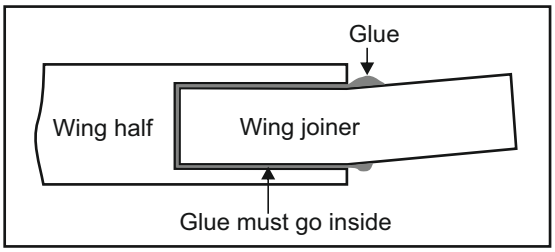

! Make sure to glue securely, If not properly glued, a failure in flight may occur.

Carefully slide the wing halves together, ensuring that they are accurately aligned. Firmly press the two halves together, allowing the excess epoxy to run out. Note: The two wing halves roots must fit together perfectly. Clear off the excess epoxy.

Hold the wing halves together with paper clamp and rubber band.

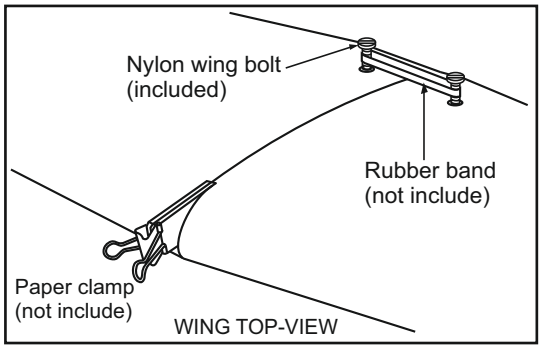

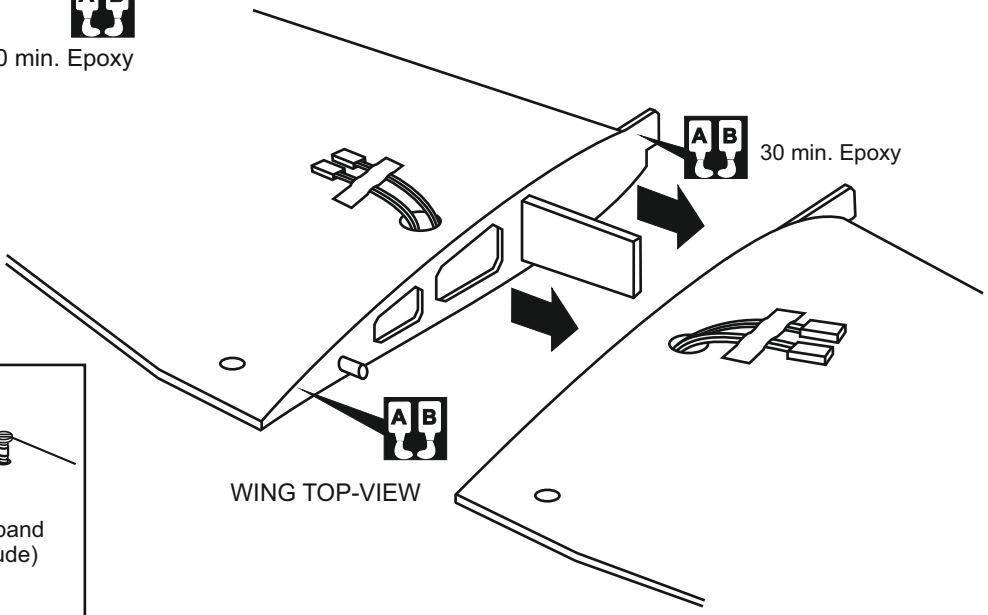

IMPORTANT: Please do not clean off the excess epoxy on the wing with strong solvent or pure alcohol, only use kerosene to keep the colour of your model not fade.

12- Wing tip Tank

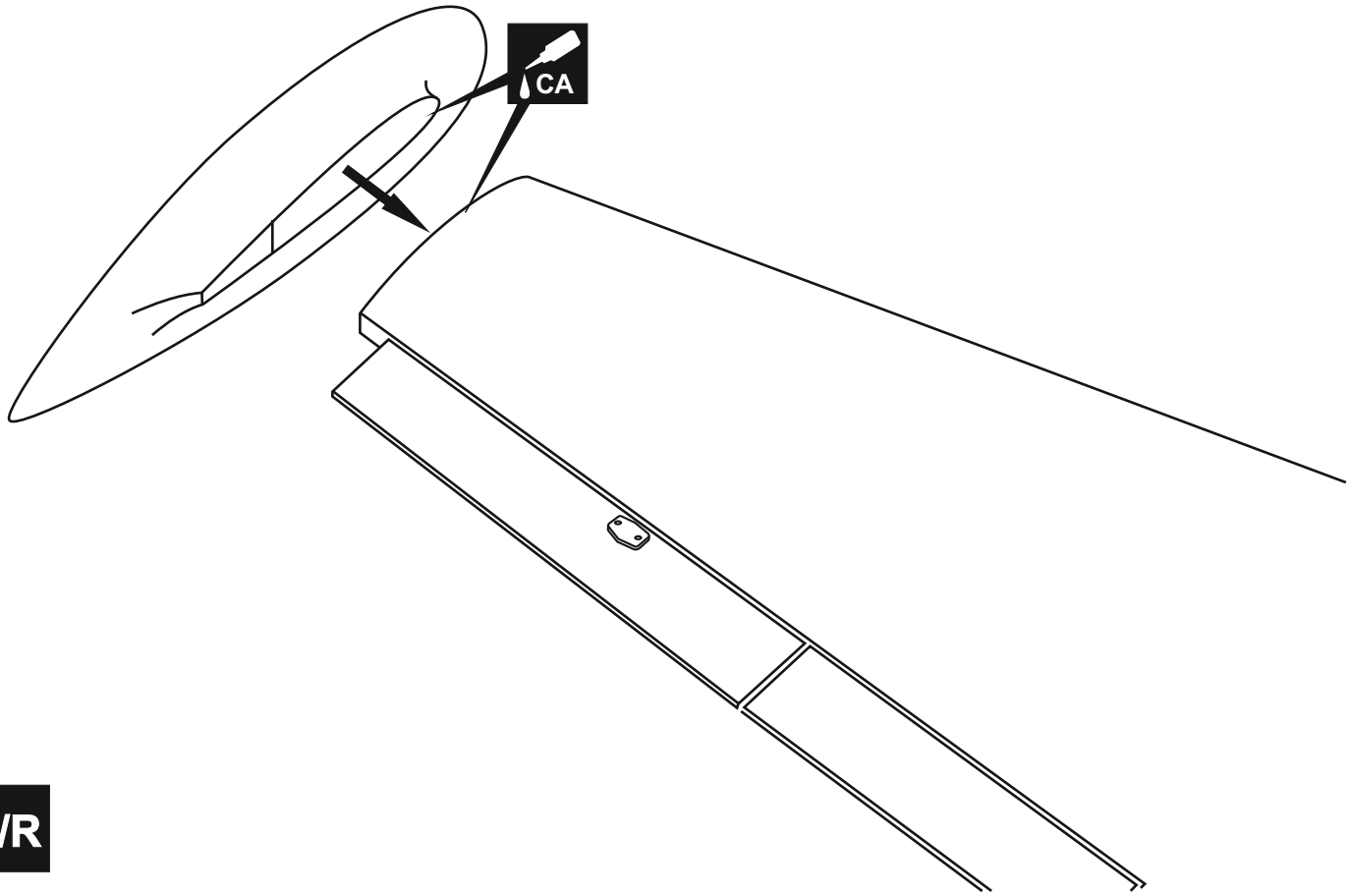

L/R

13- Horizontal Stabilizer installing

13A

Using a sharp hobby knife, carefully cut away the covering around of all slots for the horizontal stabilizer installation.

Pull the left and right elevator out of the horizontal stabilizer.

13B

Push the horizontal stabilizer into the slot on the fuselage as show. Check the alignment of the horizontal stabilizer by measuring from a fixed point along the center line of the fuselage to the leading edge on each side of the horizontal stabilizer. The distance must be equal on both sides . If not, adjust the stabilizer until the measurements are the same (see picture below: A=A').

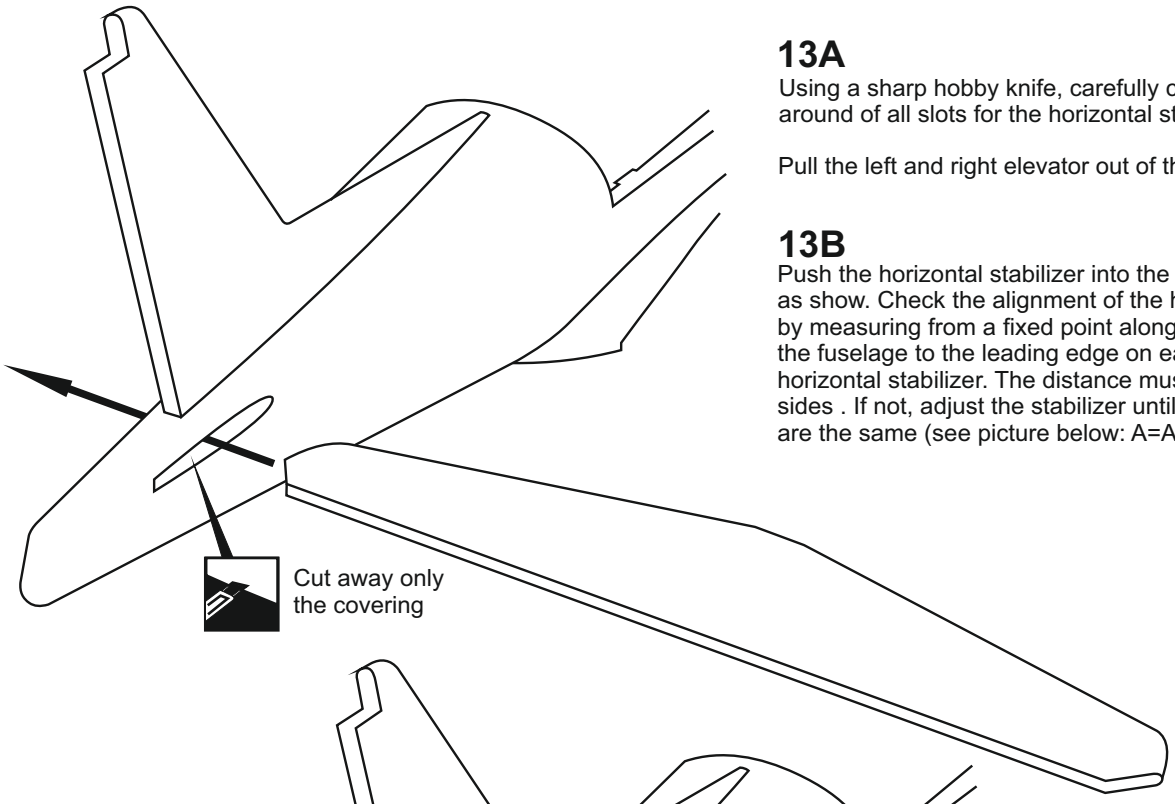

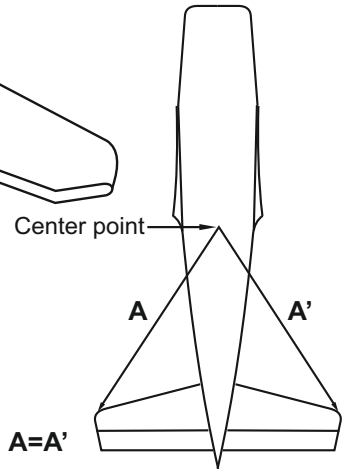

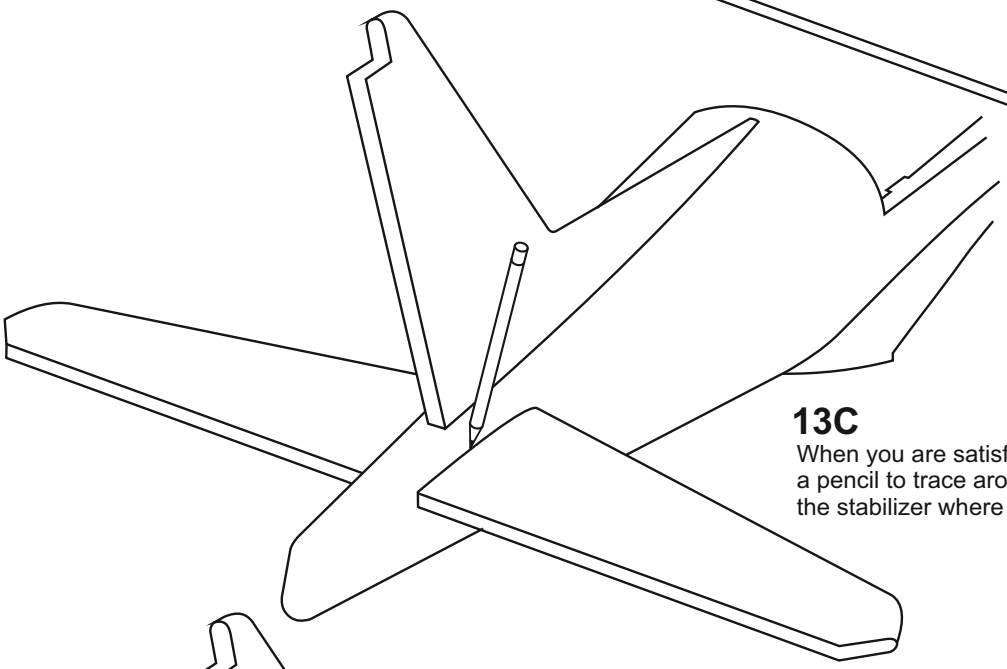

13C

When you are satisfied with the alignment, use a pencil to trace around the top and bottom of the stabilizer where it meets the fuselage.

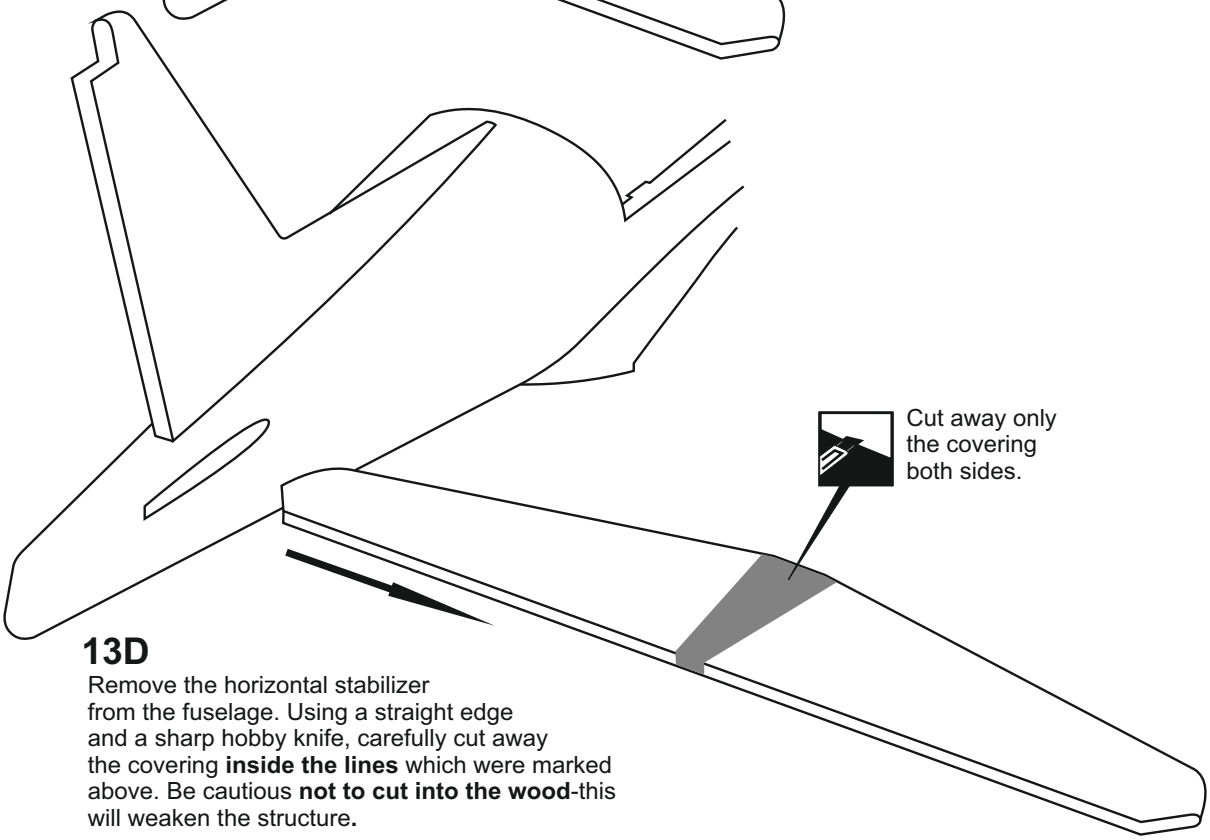

13D

Remove the horizontal stabilizer from the fuselage. Using a straight edge and a sharp hobby knife, carefully cut away the covering **inside the lines** which were marked above. Be cautious **not to cut into the wood**-this will weaken the structure**.**

14- Horizontal Stabilizer installing continued

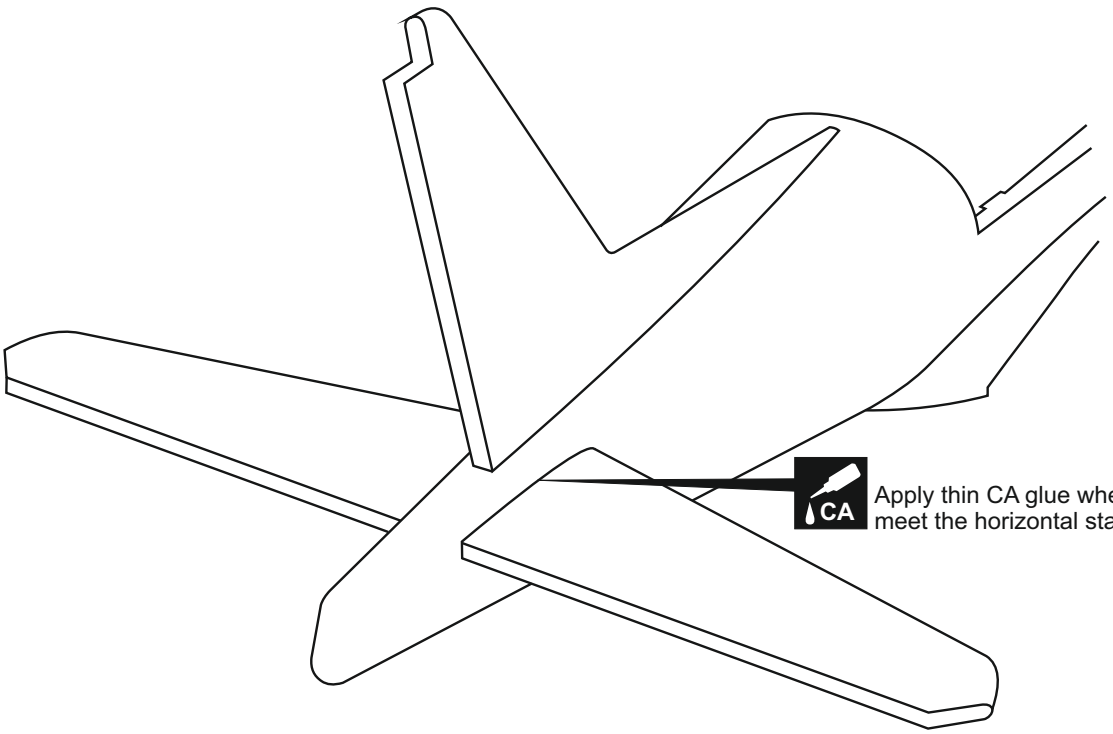

Install the horizontal stabilizer onto the fuselage and adjust the alignment as described in steep 13B.
Note: it is important to ensure that the horizontal stabilizer is also level in regards to the fuselage.
Apply the thin CA along the area where the covering was removed in the previous step and to the fuselage where the horizontal stabilizer mounts .

! Securely glue together. If coming off during fly, you lose control of your air plane.

15- Rudder and Elevator

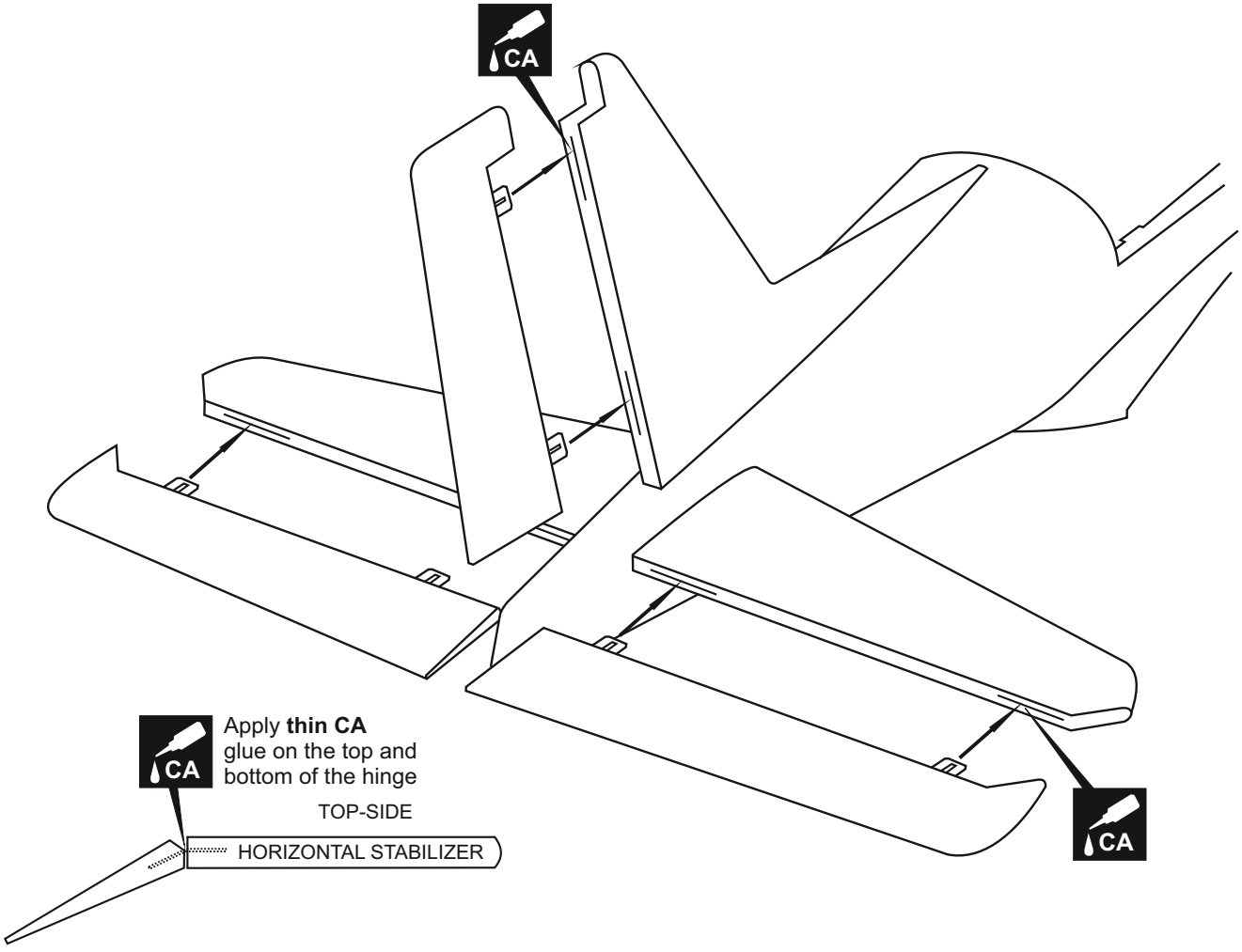

16- Control horn installation

Plastic control horn 3

Plastic back plate 3

2x15mm screw 6

2x12mm

2mm

2mm

2mm

CA

Control horn Alignment

STABILIZER

Attach the rudder control horn using the hardware provided (two 2x15mm screws and a back plate).

17- Engine

Attach the engine mount beams onto the fire-wall so the distance between of two engine mount beams is “A”,and B=B’ as show.
Secure the engine mount beams onto the fire-wall with litter CA glue (1B)

! Align the mark on both engine mount beams with the mark on the fuselage

Using a pencil or felt tipped pen, mark the fire wall where the four holes are to be drilled(1B))

A

B

B’

A

6mm

B

B’

B=B’

4x25mm screw - washer 4

Blind-nut 4

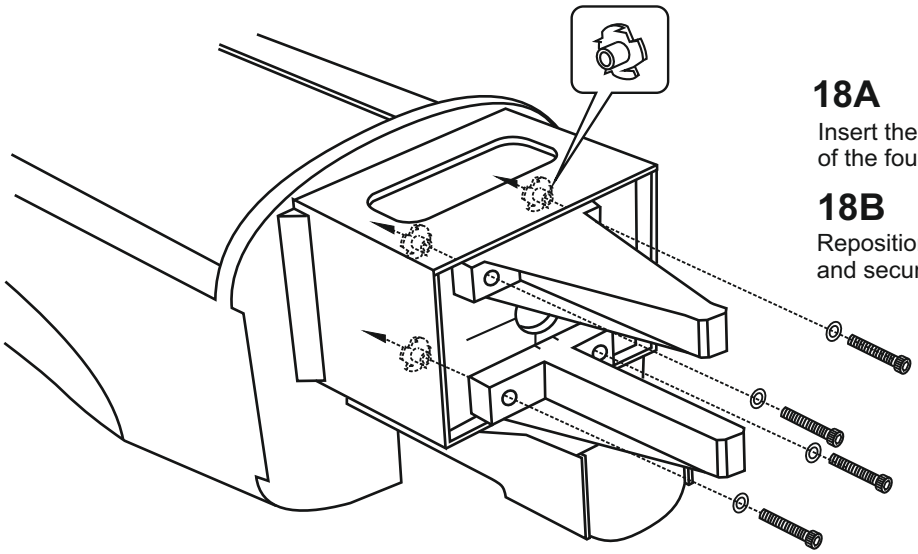

18A

Insert the blind-nut onto each of the four holes make above .

18B

Reposition the engine mount beams on to the fire-wall and secure them with four 4x25mm screw.

! Engine thrust on balk head is already adjust at factory

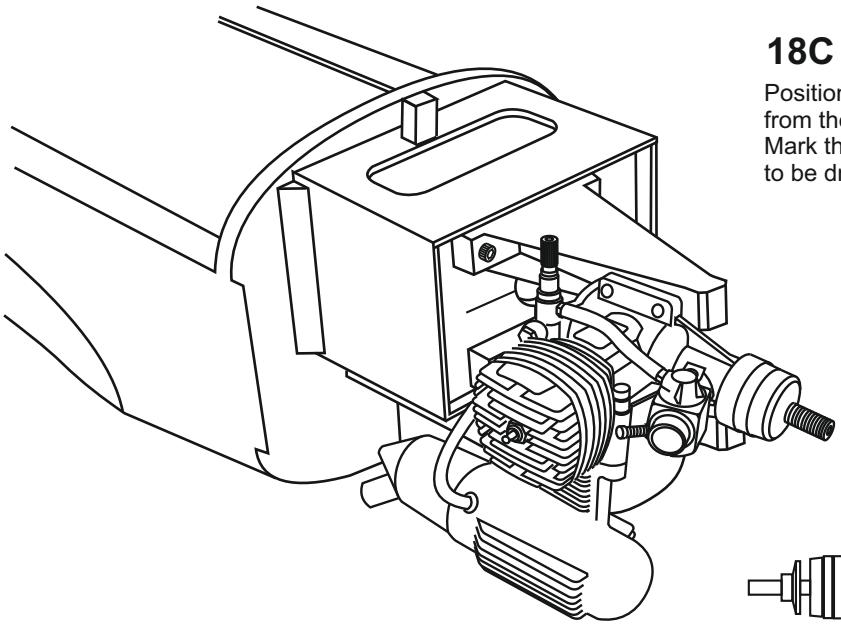

18C

Position the engine to the engine mounts so the distance from the prop hub to the fire-wall is 140mm.
Mark the engine mounting plate where the four holes are to be drilled.

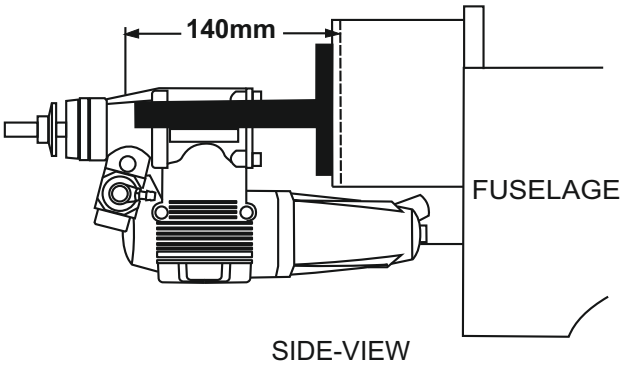

SIDE-VIEW

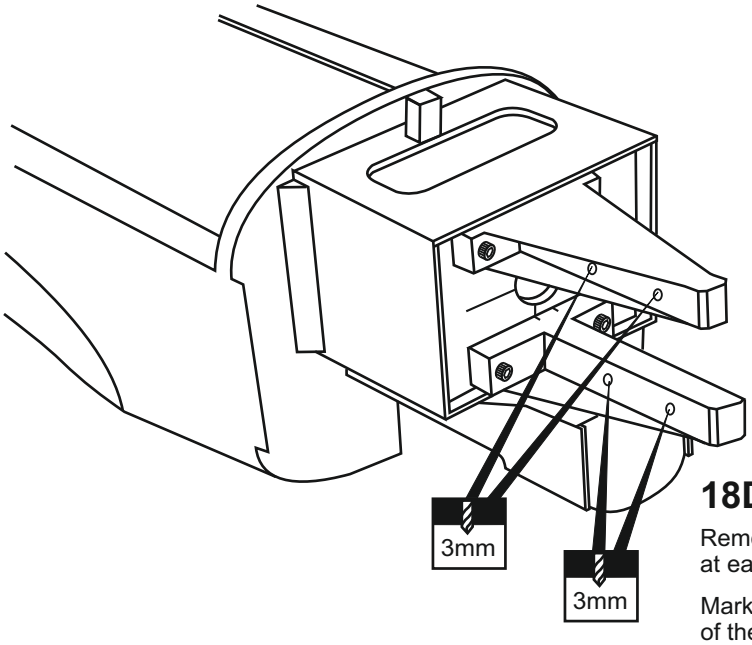

18D

Remove the engine and drill a 3mm holes through the beam at each of the four marks made above.

Marking sure that you drill the hole perpendicular to the beam of the engine mount.

19- Engine continued

3x25mm screw 4
Washer 4
3mm nut 4

Reposition the engine on the engine mount beams, aligning it with the holes. Secure the engine to the engine mount using four 3x25mm screws.

Note: Apply Silicon sealer to each of the 3x25mm screw and nut.

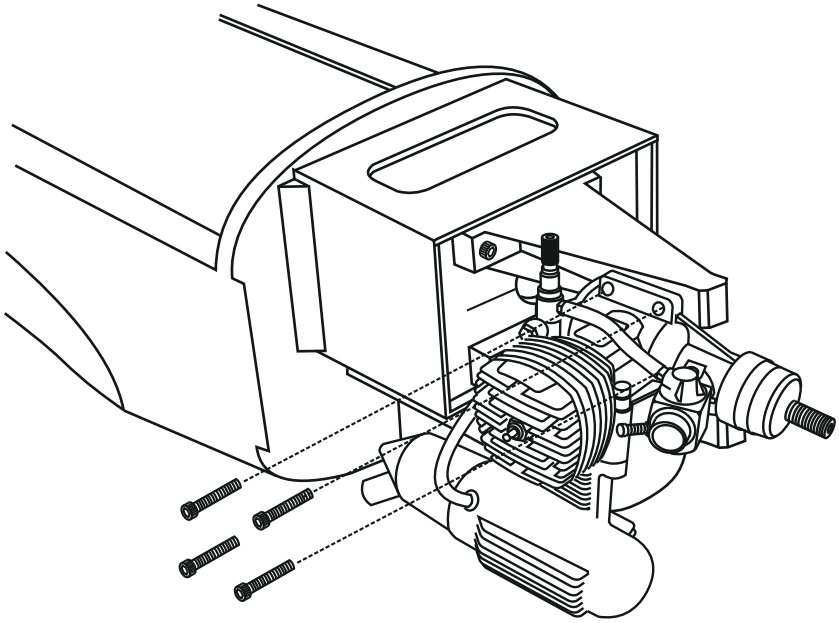

20- Fuel tank

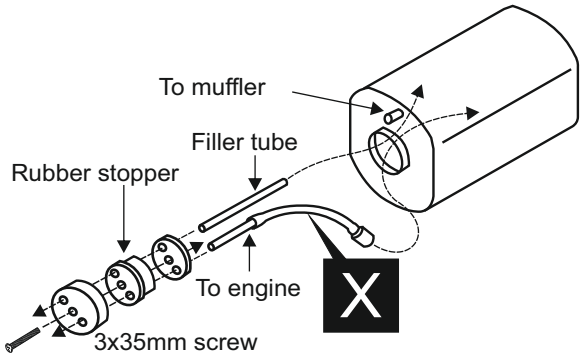

Checking for leaks - block the vents and blow into the feed - if in doubt submersing the tank in a blow of water will show up any problems.

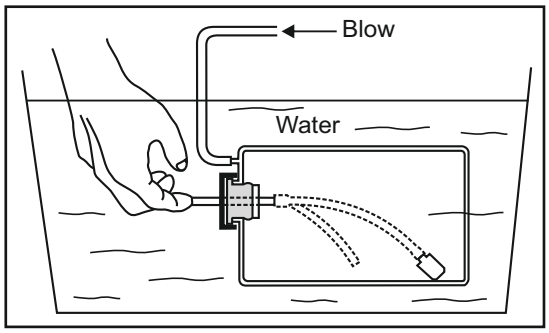

21- Electric Motor

21A

Using a aluminum motor mounting plate as a template, mark the plywood motor mounting plate where the four holes are to be drilled.

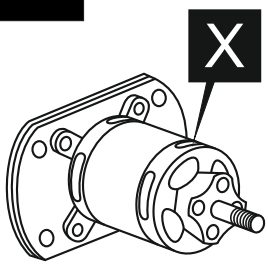

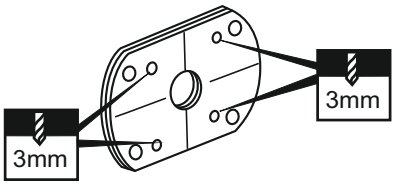

21B

Remove the aluminum motor mounting plate and drill a 1/8”(3mm) hole through the plywood at each of the four marks marked .

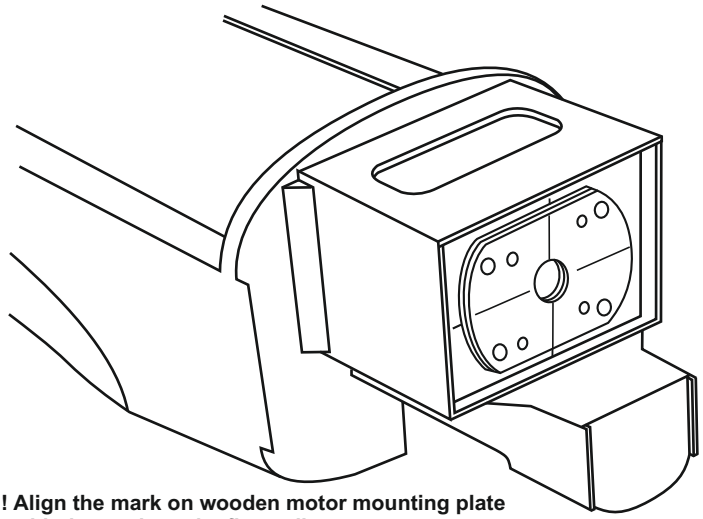

21C

Using a wooden motor mounting plate as a template, mark the fire-wall where the four holes are to be drilled.

! Align the mark on wooden motor mounting plate with the mark on the fire-wall.

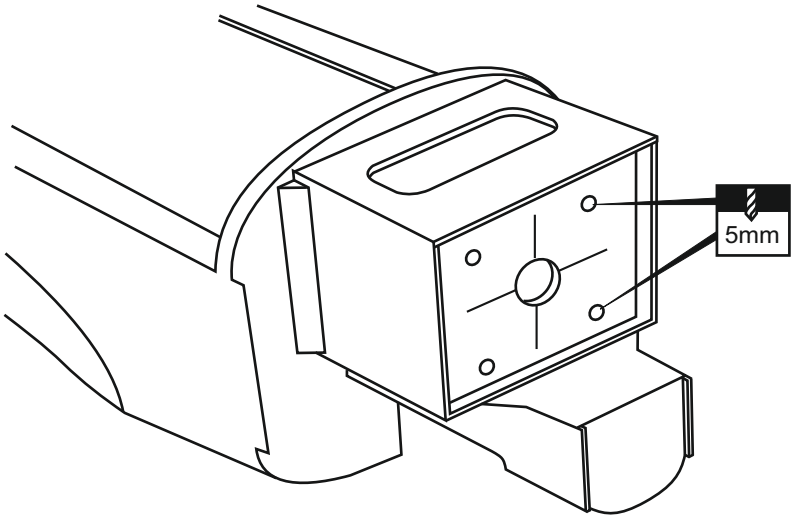

22A

Remove the wooden motor mounting plate and drill a 5mm hole through the fire-wall at each of the four marks marked .

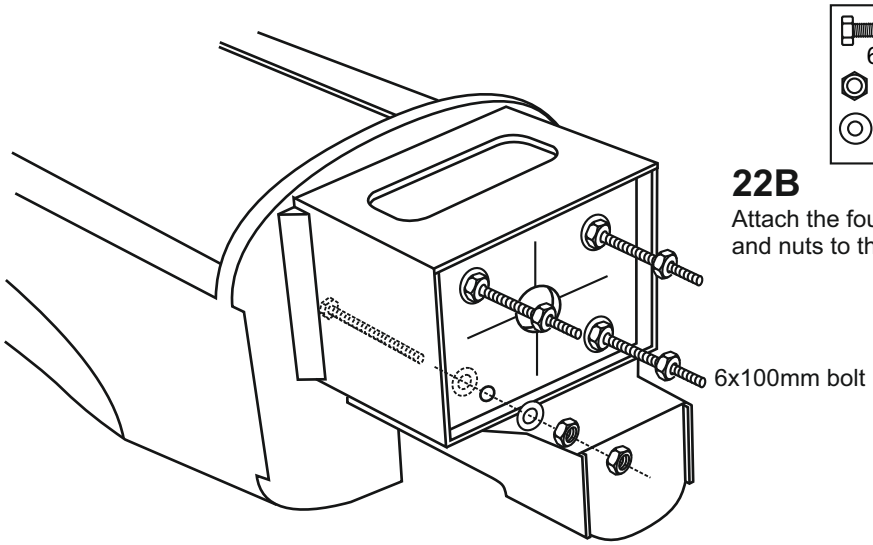

6x100mm bolt.....4
6mm nut.....12
6mm washer...16

22B

Attach the four 6x100mm bolts and nuts to the fire-wall as shown.

3mm bolt / nut...4

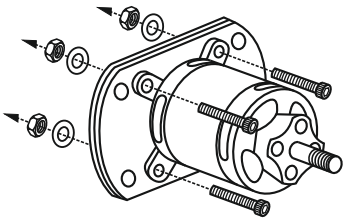

22C

Secure the Motor to the wooden motor mounting plate using the four 3mm bolts.

22D

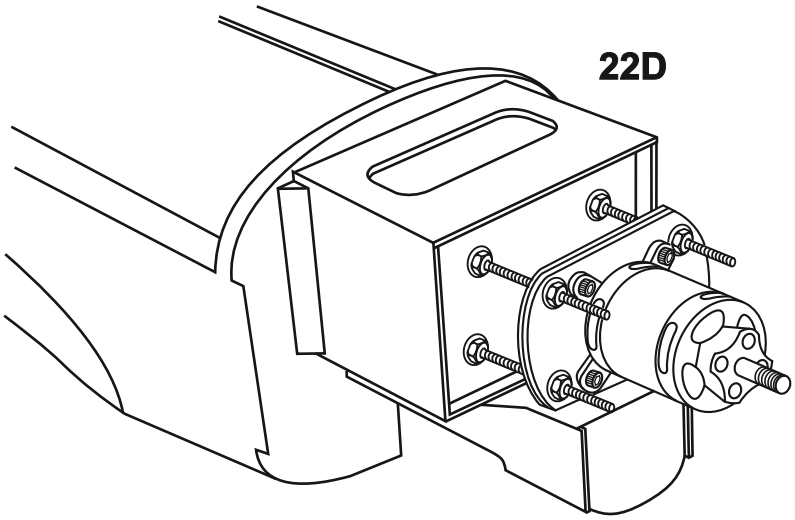

SIDE-VIEW

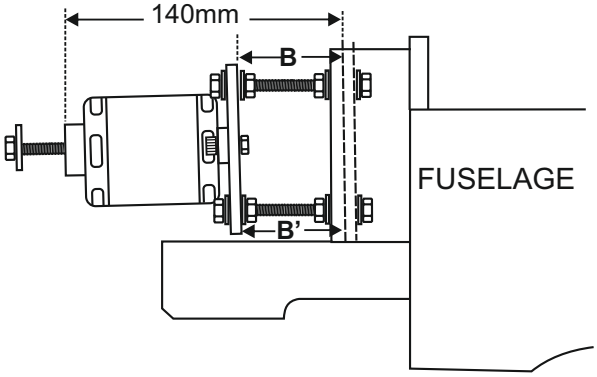

! Motor thrust on balk head is already adjust at factory

B=B'

23- Nose Gear (Electric retract and strut)

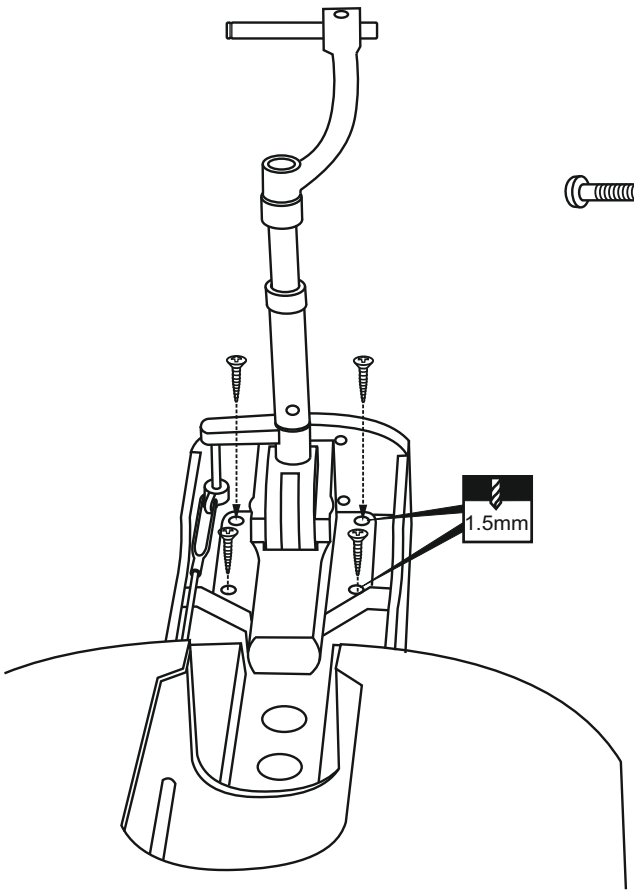

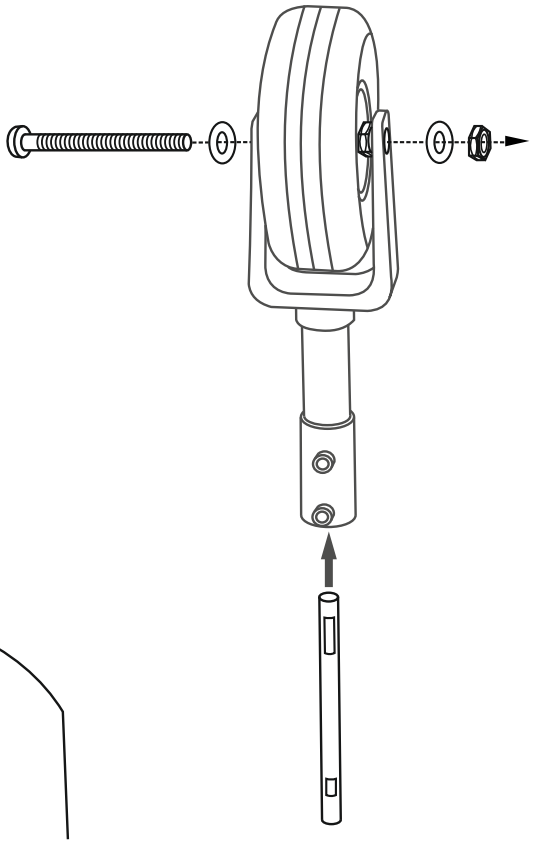

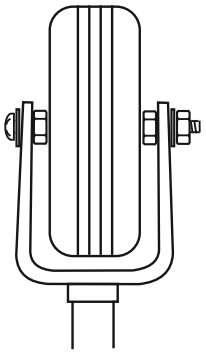

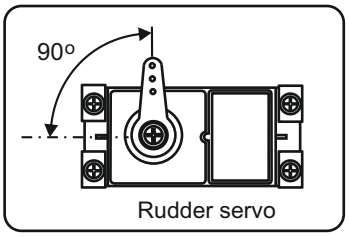

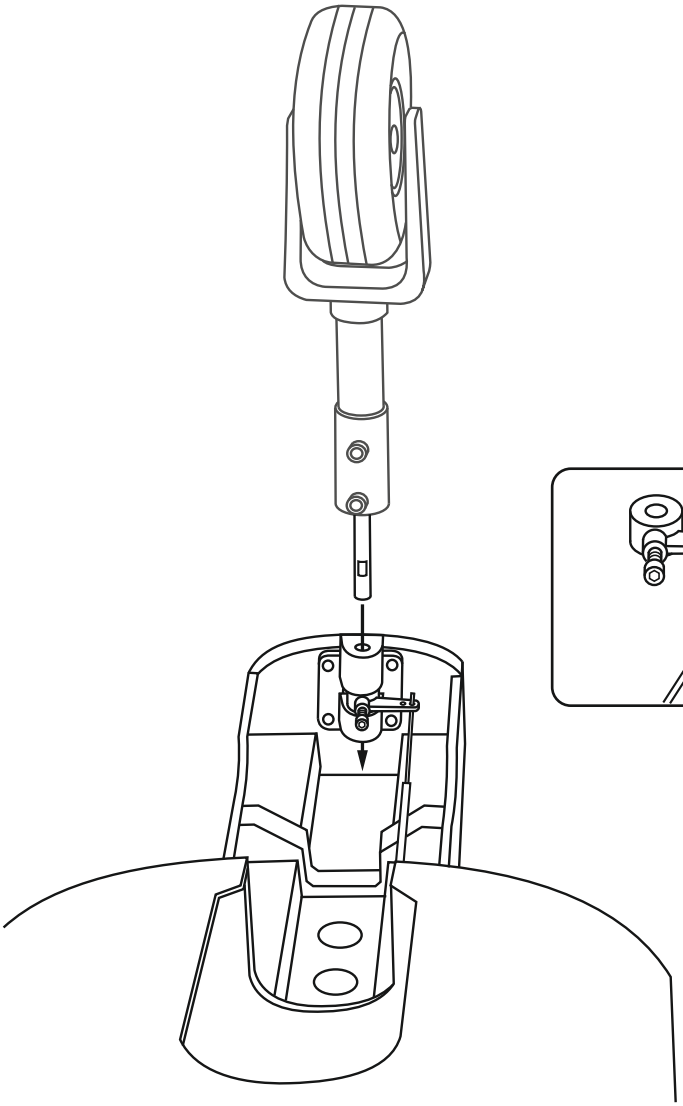

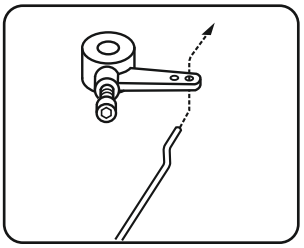

24- Nose Gear (Fixed gear)

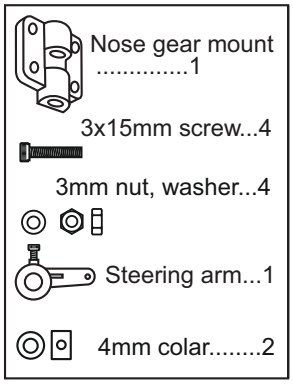

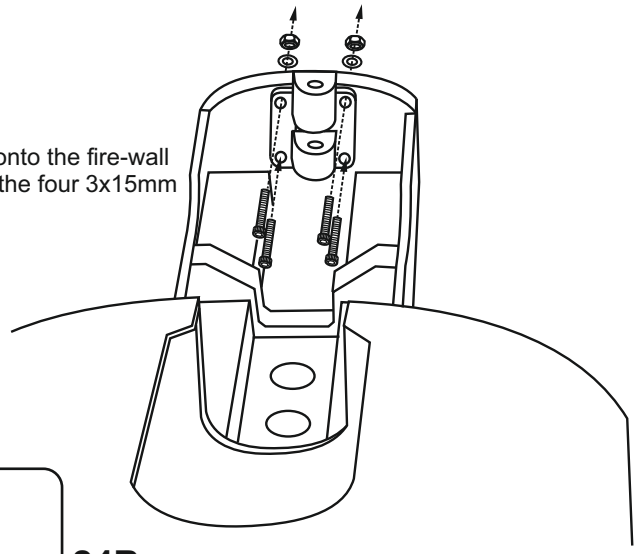

24A

Place the nose gear mount onto the fire-wall and secure it in place using the four 3x15mm screws.

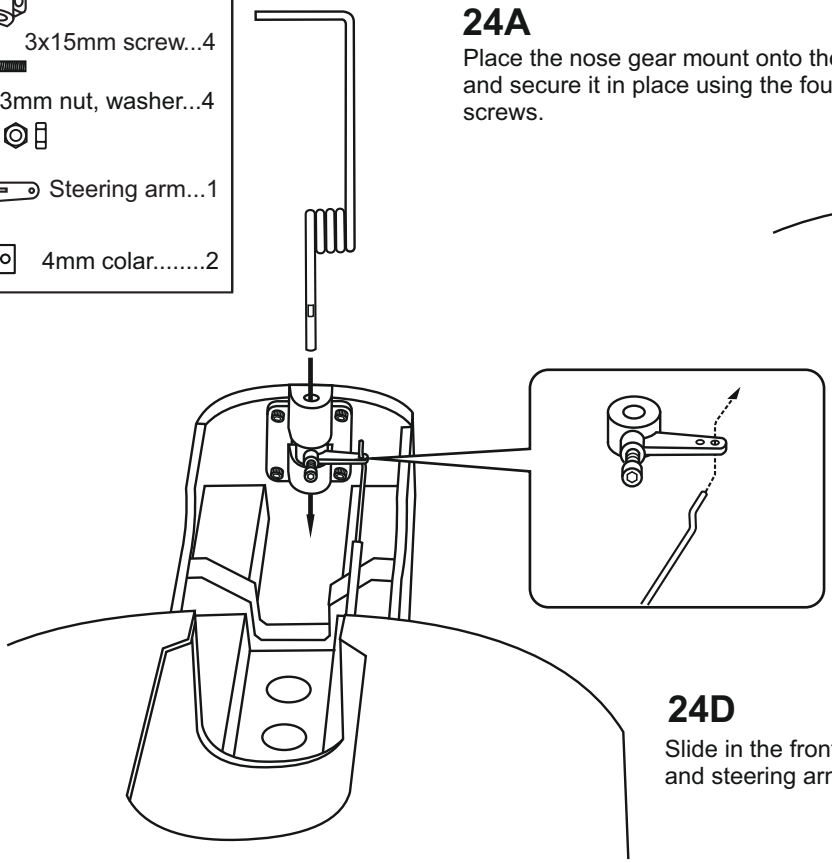

24B

Insert “z” bend of steering linkage inside the hole of front landing gear steering arm

24C

Position the steering arm inside the front landing gear mount already.

24D

Slide in the front gear leg with the flat to back through the bearing and steering arm.

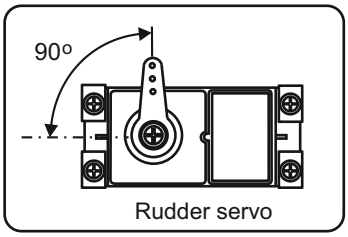

24E

Screw steering arm on the leg.

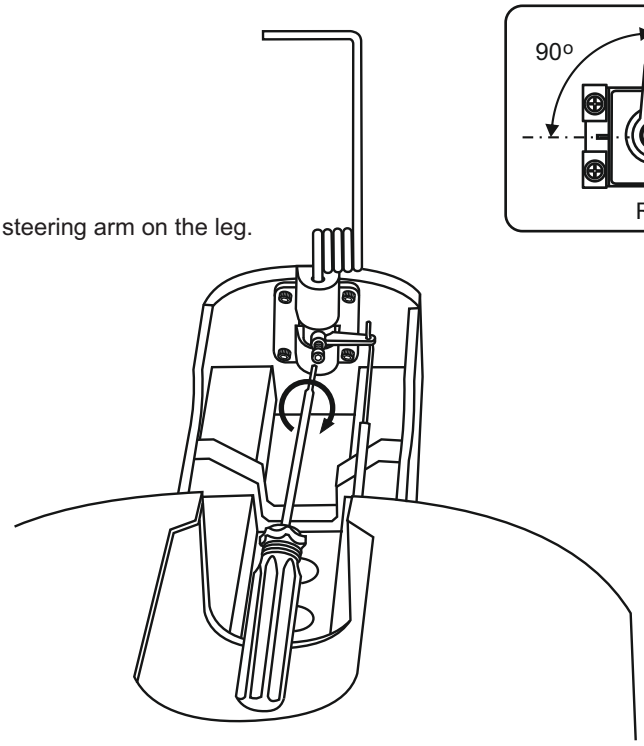

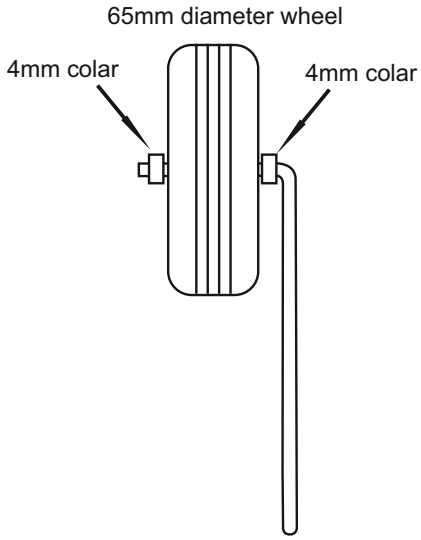

25- Servo and Linkage

Siai Marchetti SF-260

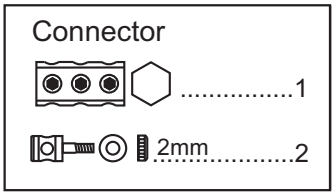

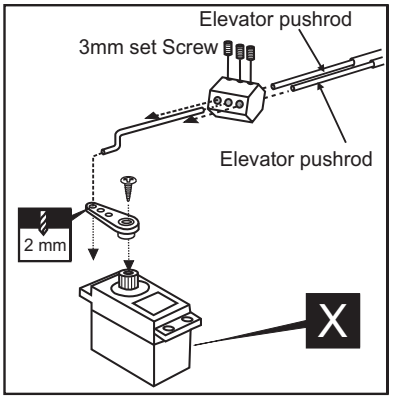

LINKAGE - IN CASE OF ELECTRIC MOTOR USING

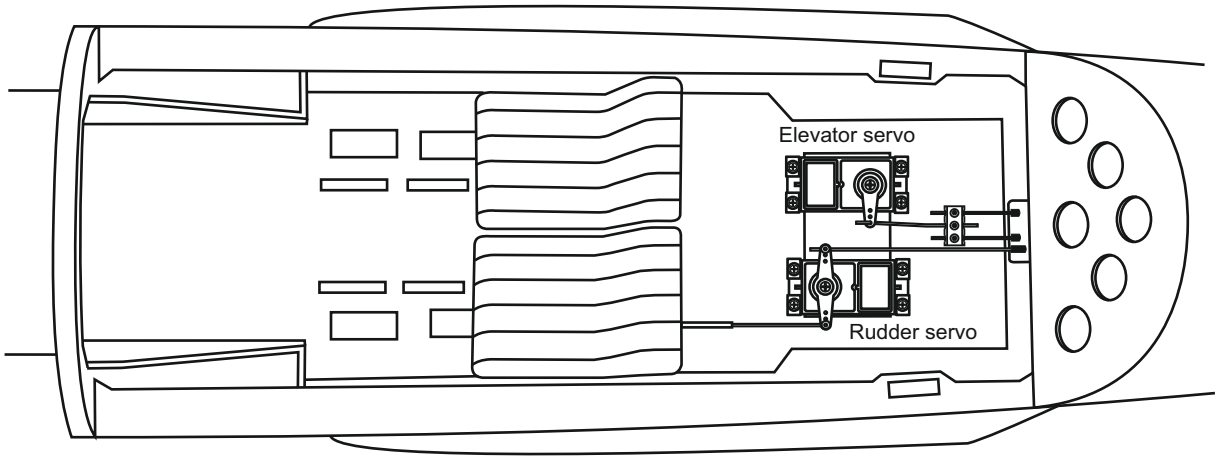

LINKAGE - IN CASE OF GLOW ENGINE USING

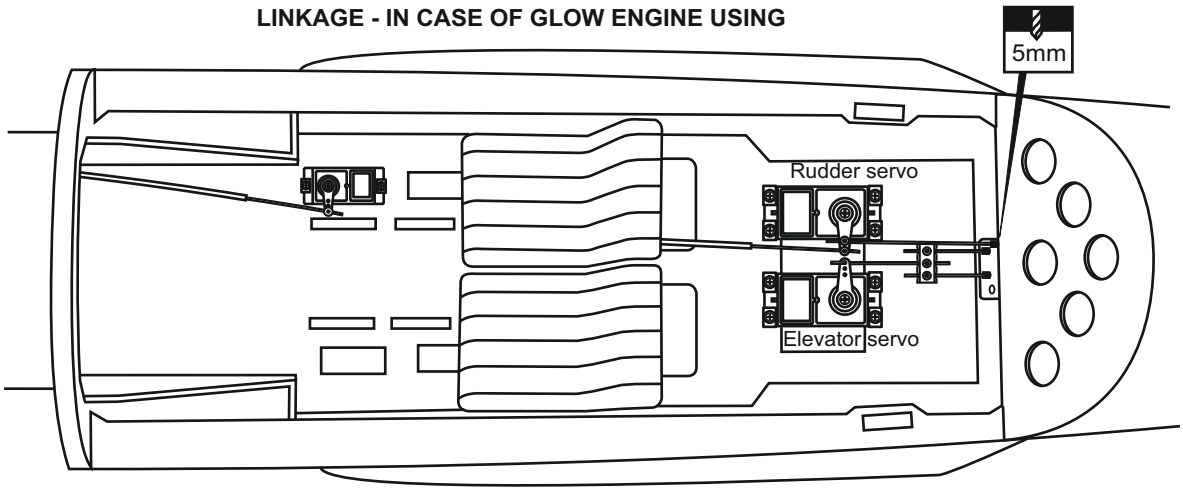

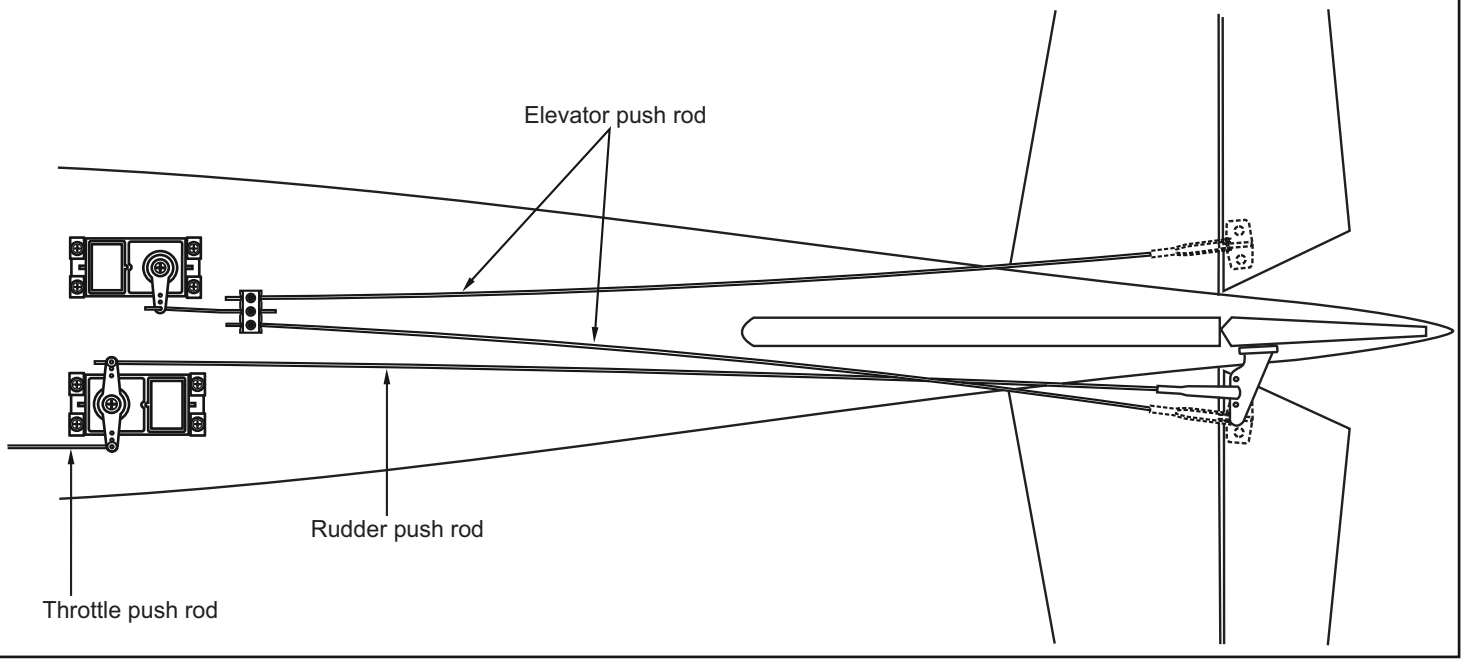

26- Servo and Linkage

2.5x12mm self tapping screw 5

Cut off shaded portion

1.5mm

2.5mm
self tapping screw

1.5mm

2mm

27- Decal

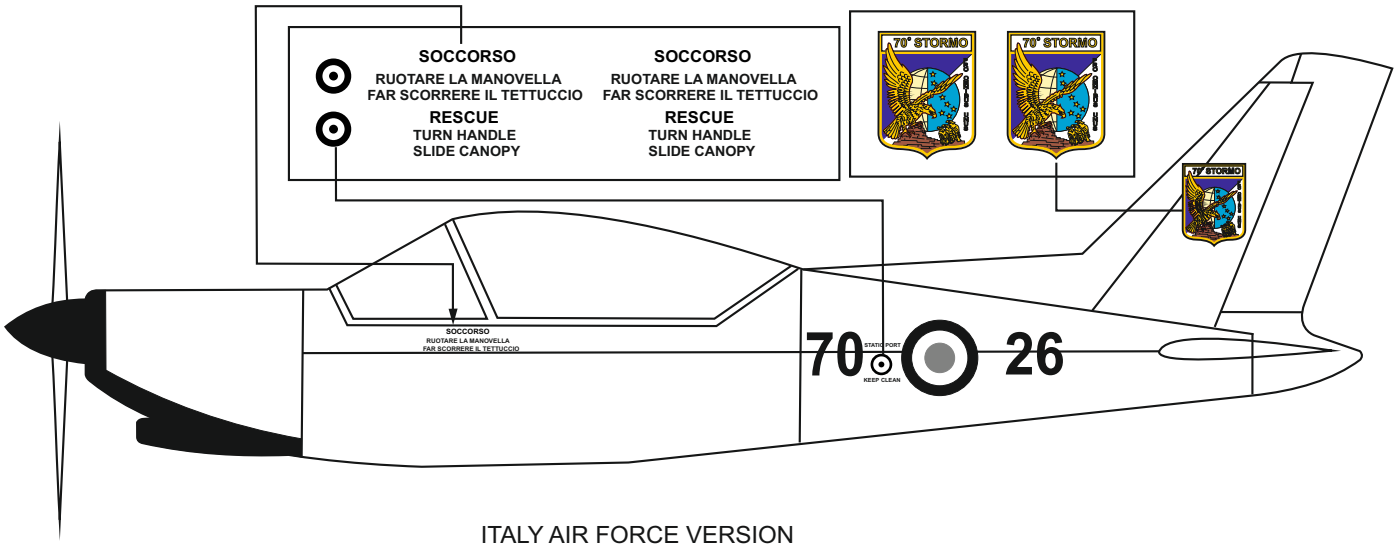

ITALY AIR FORCE VERSION

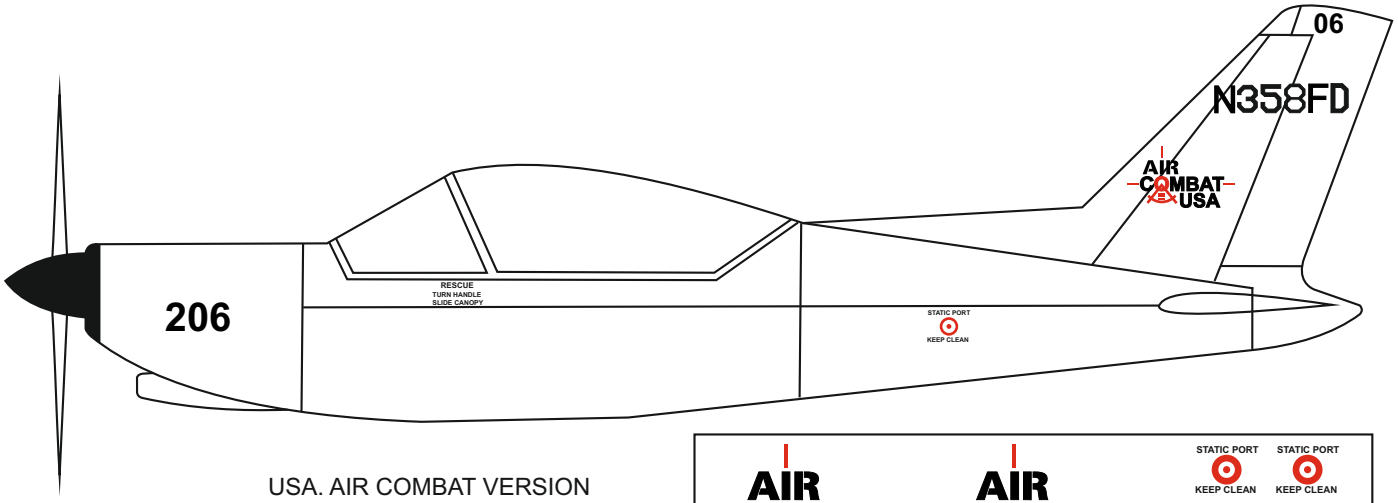

USA. AIR COMBAT VERSION

Note: Cut out the stickers and apply them in the proper area. Do not peel the backing paper off all at once.
Peel off one corner of the backing and cut off with scissors.
Arrange sticker on model and when satisfied adhere the corner without backing.
Carefully peel back the rest of the backing while at the same time adhering the rest of the sticker.
Try not to make air bubbles, if there are some, carefully puncture sticker (center of bubble) but not model surface with the tip of the knife or sharp pin and squeeze out the air.
At curves stretch sticker and apply a little heat so that no ceases occur.

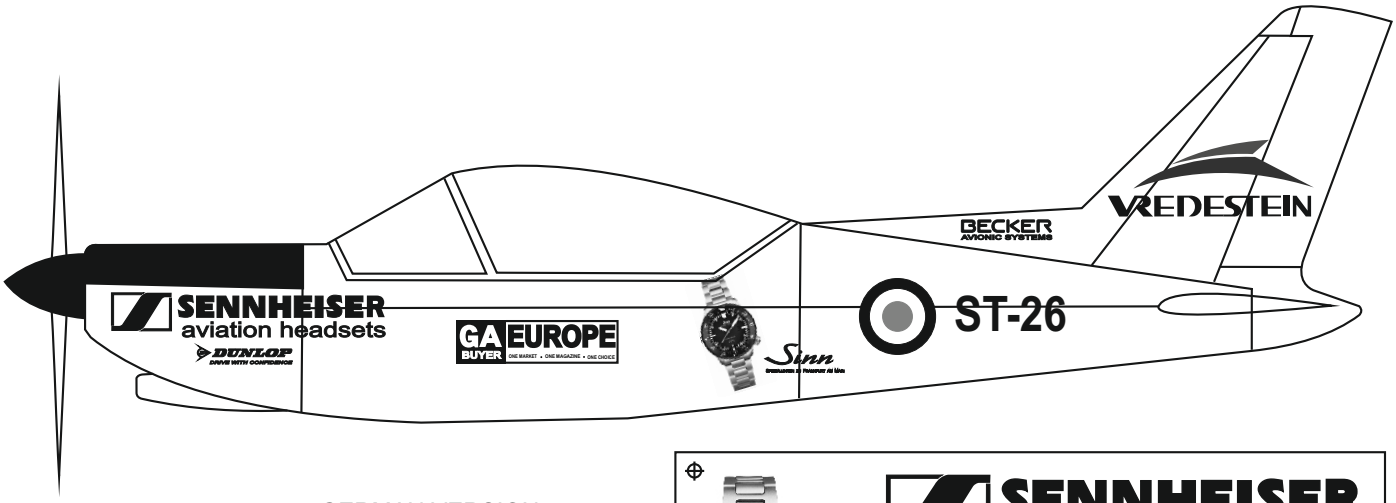

GERMAN VERSION

See at www.sf-260.de

29- Balancing

THE CENTER OF GRAVITY IS LOCATED BACK FROM THE LEADING EDGE OF THE WING, AT THE FUSELAGE. BALANCE THE PLANE UPSIDE DOWN WITH THE FUEL TANK EMPTY.

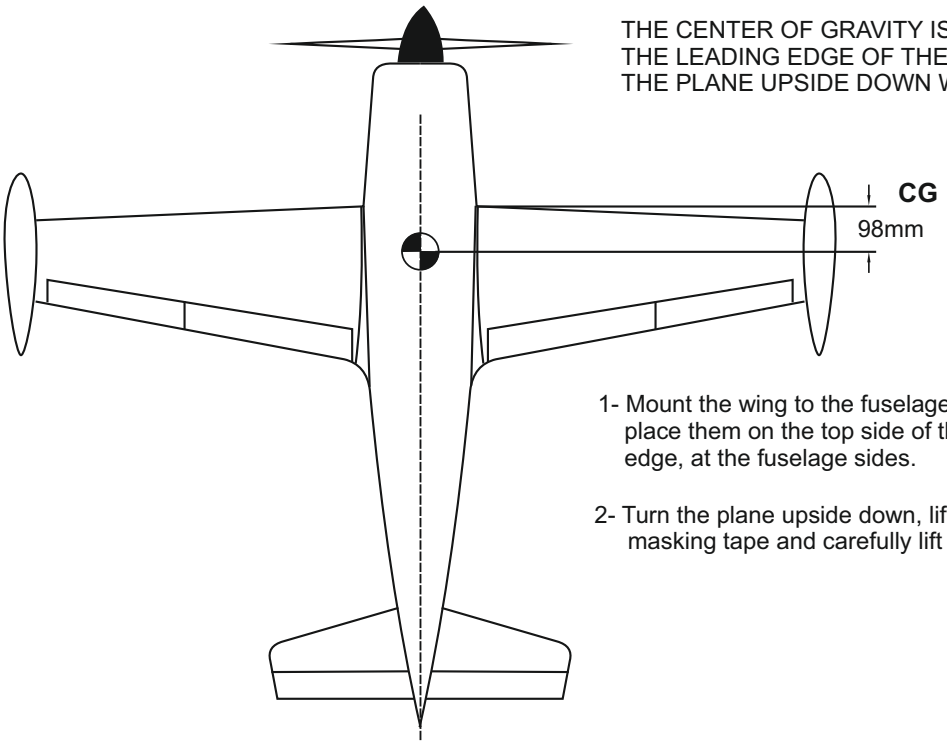

1- Mount the wing to the fuselage. Using a couple of pieces of masking tape, place them on the top side of the wing (98mm) back from the leading edge, at the fuselage sides.

2- Turn the plane upside down, lift the airplane. Place your fingers on the masking tape and carefully lift the plane.

3- If the nose of the plane falls, the plane is heavy nose. To correct this, move the battery pack further back in the fuselage.
If the tail of plane falls, the plane is tail heavy. To correct this, move the battery forward or if this is not possible, stick weight onto the firewall.
When balanced correctly, the airplane should level or slightly nose down when you lift it up with your fingers.

LATERAL BALANCE:

After you have balanced a plane on the CG, you should laterally balance it. Doing this will help the airplane track straighter.

1- Turn the airplane upside down. Attach one loop of heavy string to the engine crankshaft and one to the tail wheel wire. With the wing level, carefully lift the airplane by the string. This may require two people to make easier.

2- If one side of the wing fall, that side is heavier than the opposite. Add small amounts of lead weight to the bottom side of the lighter wing half's wing tip. Follow this procedure until the wing stays level when you lift the airplane.

DO NOT try to fly an out-of-balance model !

30- Control throws

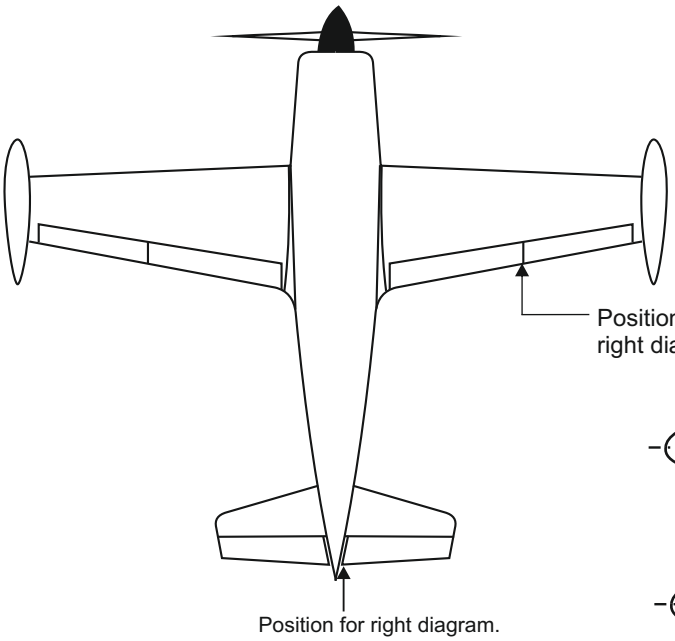

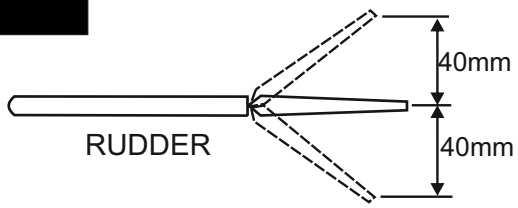

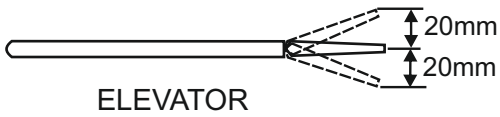

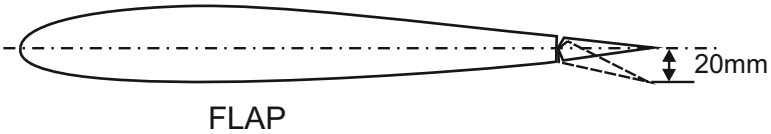

IMPORTANT: Flying your model at these throws will provide you with the greatest chance for successful first flights.
If,after you have become accustomed to the way the Siai Marchetti SF-260 flies, you would like to change the throws to suit your taste that is fine. However, too much control throw could make the model difficult to control, so remember, "more is not always better".